Probabilistic design and risk based approach in civil engineering

Cong V. Mai[1,2] , Han Vrijling[2], P.H.A.J.M. van Gelder[2]
(1. Fac. of Ocean and Coastal Engineering, Water Resources University of Vietnam, Hanoi, Vietnam
2. Dept. of Hydraulic Engineering, Fac. Of Civil Engineering, Delft University of Technology, The Netherlands
Corresponding author's email: C.Maivan@Tudelft.nl)

Abstracts: Use of probabilistic methods are increasing in civil engineering design. The probabilistic methods allows designers, firstly, to take into account uncertainties of input parameters and to treat them as random variables. Secondly the civil engineering structure can be considered like a system which comprises number of components. Subsequently probabilistic approach aims to determine the true probability of failures of the whole system and to judge its acceptability in the view of the consequences. Having an existing system the actual safety level of the system is interested issue. By application of the probabilistic design this issue is able to be solved by implementing a reliability safety assessment, in which all possible failure mechanisms is taken into consideration as well as uncertainties of the boundary condition. However, questions are often reversed when the structured system is in design phases. Typically, these two following questions may arise: (i) what should be design safety level? And, (ii) given a design safety level, what will be the best design alternative of the system? The first question is possible to answer by optimizing costs of construction and the consequences of system failure. A framework of risk analysis is developed for this purpose and presented by a "risk-based optimization model" in this paper. Since the level of safety is chosen, various geometry alternatives of the system components can be generated. In order to answer the last question, for each of those the failure probability and the total cost of construction need be determined. Again the minimum point of total construction costs in space of failure probability is searched, given a required level of safety (level of protection). This later procedure is, in this study, called "reliability-based optimization model". This paper presents the basis of probabilistic design and risk-based approach and some initial results for these above issues with an application to the sea dikes system in Vietnam. Methods and proposed models can be modified and developed in order to be able to apply widely for other types of structure system in the field of civil engineering.

Keywords: Safety assessment, failure mechanisms, system reliability, risk analysis, sea dikes, optimal design.

1 Introduction

In civil engineering design one often knows of conventional design method which is considered as deterministic approach. The basic of the deterministic approach are the so-called design values for the loads and the strength parameters. Loads for instance are the design water level and the design significant wave height. Using design rules according to codes and standards it is possible to determine the dimensional geometrical parameters of the civil engineering structures i.e buidings, bridges, tunnels, dams, dikes and storm surge barriers. These design rules are, in general, based on limit states of the structure's elements.

In deterministic approach it is assumed that the structure is safe when the margin between the design value of the load and the characteristic value of the strength is large enough for all limit states of all elements. Therefore the safety level of a structured system is not explicitly known [10].

Probabilistic design approach with reliability- and risk- based design concepts have been increasingly proposed and applied in the fields of civil engineering and water defences during the last few years (see e.g. the concept, method and application in [1]; [10]; [7]; [9]). A fundamental difference with the deterministic approach is that the probabilistic design methods are based on an acceptable frequency or probability of failure of the considered structure.

The probabilistic approach allows designers: (i) take into account the uncertainties of the input parameters and treat them as the random variables; (ii) describe failure of the structure in various possible failure modes which based on the physical processes of these failure mechanisms; and (iii) find a probability of failure of the whole system taking account of each individual element (cross-section and/or structure); For instance, with a flood defence system, the accepted probability of flooding is not the same for every polder or floodplain. It depends on the nature of the protected area, the

expected loss in case of failure and the safety standards of the country. For this reason accepted risk is a better measure than an accepted failure probability because risk is a function of the probability and the consequences of flooding. The failure probability and the probability of the consequences form the probability part of the risk. When the risk is calculated the design can be evaluated. For this criteria must be available such as a maximum acceptable probability of a number of casualties or the demand of minimizing the total costs including the risk. For determining the acceptable risk it needs to refer to a frame of reference. This frame of reference can be the national safety level aggregating all the activities in the country. After the evaluation of the risk one can decide to adjust the design or to accept it with the remaining risk. Thus, the probabilistic approach is an integral design method for the whole system.

However, applications of probabilistic design and risk analysis are still limited because of its complexity in use [2]. This paper, on the basic of probabilistic design and risk-based approach, will present some initial results for these above issues with an application to the sea dikes system in Vietnam. Methods and proposed models can be modified and developed in order to be able to apply widely for other types of structure system in the field of civil engineering. More researches and application of these design methods in civil engineering design are therefore relevant. Especially in the developing countries such as Vietnam, China… where the modernization and urbanization is bloomed, all new design works should be under careful consideration in the sense of reliability and in term of optimization. Optimization can be done by balancing the benefit with initial investment, repaired and maintenance costs and consequences of potential failures. Final decision should take into account also the developing characteristics i.e. limited initial investment, fast economic growth and cheap labors available. The probabilistic design approach is capable to solve these above issues.

In this paper methods of probabilistic design and risk-based approach are presented and critical reviewed. Development is made with an application to the sea dikes system in Vietnam. Methods and proposed models can be modified and developed in order to be able to apply widely for other types of structured system.

2 Background information and study approach

2.1 Level of approach in civil engineering design

The safety of a structure with regard to a particular mechanism can be expressed as its probability of failure concerning that mechanism. The following four levels of approach were distinguished in determination of the safety of a structure [2]:

Deterministic approach (level 0-approach): The design is based on average situations and an appropriated safety factor is introduced for obtaining a safe structure;

Semi-probabilistic approach (level I-approach): A characteristic value is used in the design, like the load which is not exceeded in 95% of the cases, or the strength which is available for 95% of the construction material;

Probabilistic approach (level II and III approaches): Full statistical distributions of all variables are taken into account. Two levels can be distinguished are II and III. Level II comprises a number of approximate methods in which the distribution functions are transformed into standard normal or standard Gaussian distributions. In order to approximate the probability of failure, mathematical formulation of the problem has to be linearised. While in a level III approach the probability distribution functions of the stochastic variables are fully taken into account. If the problem is nonlinear, this is taken into account as well.

Presently, probabilistic techniques are further developed and refined. A number of researches has been implemented. In practice the design is mainly made following semi-probabilistic or even fully deterministic methods. In a semi-probabilistic approach the probability of failure is based upon risk analyses specified for the type of structure under consideration and for specified hazards. A certain load, S_D (for instance the design wave height, resulting from a statistical analysis), corresponds to the accepted probability, P_f. In practice the (small) value of P_f is usually accepted as an average probability per year that the structure fails or an average return period as its reciprocal value, $T_R=1/P_f$. The interpretation of the return period is: the expectation of the expected value of the duration of time between two occurrences of exceedance of the design load (design wave height).

In a probabilistic approach every mechanism is described by a mathematical expression or computational model. On that basis a so-called reliability limit state function or *Z*-function, *Z=Strength-Load*, is defined with regard to the limit state considered. The failure function, *Z*=0, is defined as the boundary between the area's associated with failure (negative values of *Z*) and non-failure (positive values of *Z*). The probability of failure can be expressed by $P\{Z<0\}$. Usually the failure function contributes by many stochastic variables.

2.2 Probabilistic reliability analysis of a multi-elements system

Quantification of the probability of system failure starts with the definition of reliability functions for all potential failure modes of all system elements. As from literatures, the general form of reliability function can be written by:

$$g(z,X)= R(z,X) - S(z,X) \tag{1}$$

where R is the resistance of the component, S is the load acting on the component, z is a vector of design variables describing among others the structural geometry of the component and X is a vector of load of random variables.

The foundation of the level III failure probability calculation is the mathematical formulation of the subset of the probability space, which involves failure according to Eq. 1.

If the joint probability density function $f_{R,S}(R, S)$ of R and S is known, the probability of failure can be calculated by means of integration:

$$P_f = P\{Z < 0\} = \iint_{Z<0} f_{R,S}(R,S)dRdS \tag{2}$$

Because $Z < 0$ if $R < S$ the following applies:

$$\mathrm{P_f} = \int_{-\infty}^{\infty}\int_{-\infty}^{S} \mathrm{f_{R,S}}(R,S)\,\mathrm{d}R\,\mathrm{d}S \tag{3}$$

If the strength and the load are statistically independent:

$$\mathrm{P_f} = \mathrm{P(R < S)} = \int_{-\infty}^{\infty}\left(\int_{-\infty}^{S} \mathrm{f_R}(R)\mathrm{f_S}(S)\,\mathrm{d}R\right)\mathrm{d}S = \int_{-\infty}^{\infty} \mathrm{F_R}(S)\mathrm{f_S}(S)\,\mathrm{d}S \tag{4}$$

Usually, the strength and the load are functions of one or more random variables. In such a case the reliability function can be rewritten as:

$$\mathrm{Z} = \mathrm{g}(\mathrm{X_1}, \mathrm{X_2}, ..., \mathrm{X_n}) \tag{5}$$

The probability of failure can then be calculated with the integral:

$$\mathrm{P_f} = \int\int_{\mathrm{Z<0}}\ldots\int \mathrm{f}_{\mathrm{X_1,X_2,\ldots,X_n}}(X_1, X_2, \ldots, X_\mathrm{n})\,\mathrm{d}X_1\,\mathrm{d}X_2\ldots\mathrm{d}X_\mathrm{n} \tag{6}$$

If the variables X_1, X_2, ..., X_n are statistically independent, the equation can be simplified to:

$$\mathrm{P_f} = \int\int_{\mathrm{Z<0}}\ldots\int \mathrm{f}_{\mathrm{X_1}}(X_1)\mathrm{f}_{\mathrm{X_2}}(X_2)\ldots\mathrm{f}_{\mathrm{X_n}}(X_\mathrm{n})\,\mathrm{d}X_1\,\mathrm{d}X_2\ldots\mathrm{d}X_\mathrm{n} \tag{7}$$

This integral can seldom be determined analytically. The solution is therefore usually calculated with numerical methods. The two well-known of these which usually be used, are numerical integration and solutions based on the Monte Carlo method.

The design point is defined as the point in the failure space with the greatest joint probability density. This point can be found both with numerical integration and with simulation by determining the probability density of every point in the iteration or in the simulation. By remembering the point with the greatest probability density, the design point can be determined. Naturally, many more advanced methods for finding maximums are available. For these methods one is referred to handbooks for numerical methods.

In order to perform a level II calculation, the first order reliability methods (FORM in [8]) or second order reliability methods (SORM) are used. In the FORM/ SORM analysis, the failure surface $Z(X_j)$ =0 at the design point X_j^* is approximated by the hyperplane normal to the vector X_j^*.

The overall failure probability of a system component is then given by combination of failure probability of all considered failure modes:

$$P_{failure}^{comp} = P\,(Z_1<0;\ Z_2<0;\ \ldots\ Z_i<0;\ldots\ Z_m<0) \tag{8}$$

where ($Z_1<0;\ Z_2<0;\ \ldots\ Z_i<0;\ldots\ Z_m<0$) denotes at least one of m failure mechanisms occurs;

The overall system failure probability is determined in a similar way as that of the system component takes in to account the correlation between components. Several methods are available in calculating exactly the system failure probability such as methods of fault-tree analysis with numerical integration and/ or Monte Carlo simulation. For civil engineering practice one may prefer simpler but still reliable methods. Using fundamental lower and upper bounds would serve well this purpose. The system failure probability is approximated by:

$$\max\left\{P(Z_i < 0)\ \right\} \le P_{failure}^{comp} \le \sum_{i=1}^{m} P_{Z_i}\{Z_i < 0\} \tag{9}$$

For narrower bounds with better approximation it is suggested to use Ditlevsen bound (see [4]).

<u>Length effect-system failure probability</u>: Considered the dike system is uniform cross-sectional system which comprises number of independent sections. This can be described as a series system in probabilistic design. The maximum failure probability of this series system with n element may be calculated conform ([12]):

$$P_{f,system} \le 1 - \left(1 - P_{f,section}\right)^n \tag{10}$$

Discussions: Following the above background, there are two essential probabilistic approach based models which can be applied and developed conceptually:

1) Probabilistic safety assessment: If the geometry of every component is known and the joint probability distribution of load and strength variables is quantified, the probability of failure of the system of flood defences can be found. This can be applied for technical management purpose to determination of safety levels of an existing system and to find out the weakest point of the system.

2) Reliability-based design model: very often the question is, however, reversed for a design purpose. For a pre-defined failure probability (e.g. given an acceptable level of probability of flooding for a certain location) geometry of the structure needs to be found in order to fulfill the design requirement in combination with minimization of the construction cost of the system. For a fixed value of the probability of failure, the set of acceptable design alternatives is conceptually given by Eq.11a. In order to find the unique solution a cost optimization has to be accounted for as shown in (Eq. 11b). The optimal design geometry can be found mathematically, which include also maintenance/ repair costs in the optimization, by the following equation system:

$$\begin{cases} D = \{ z \mid P_f(z) \le P_{f,\max} \} \\ Min. \{ I(z \mid P_f(z) \le P_{f,\max}) + R_T(z \mid P_f(z) \le P_{f,\max}) \} \end{cases} \qquad (11a,b)$$

where $P_{f,max}$ denotes the maximum acceptable probability of system failure; I is the initial investment cost and R_T is the maintenance/repair cost during the total service lifetime of the structures, T. The investment cost can be estimated based on given geometry while the later term can be expressed through the failure probability of the each consider alternative. Again the minimum point of total construction cost in space of failure probability is searched. This procedure of the "reliability-based optimisation" is illustrated in Fig.1 (Mai et al [6], after Voortman 2002 [9]).

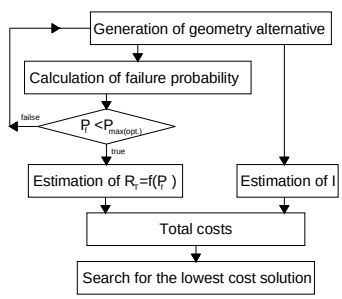

Fig. 1 General reliability-based design of coastal defences

2.3 Risk based optimal of design safety level: An approach for water defences

The modern probabilistic approach aims to give protection when the risks are felt to be high. Risk is defined as the probability of a disaster, e.g. a flood, related to the consequences. As long as the modern approach is not firmly embedded in society, the idea of acceptable risk may be quite suddenly influenced by a single spectacular accident or incident like 1953 flood disaster in the Netherlands; tsunami disaster 2004 in India, Indonesia, Sri Lanka and Thailand; Katrina in New Orleans, USA 2005; and Damrey typhoon in Vietnam 2005, etc. These could be a starting/ turning point of any new safety policy establishment. In this section risk analysis is oriented at water defence structured system on a large scale. The method can be easily modified for various other civil engineering systems.

The estimation of the consequences of a flood constitutes a central element in the modern approach. Most probably society will look to the total damage caused by the occurrence of a flood. This comprises a number of casualties, material and economic damage as well as the loss of or harm to immaterial values like works of art and amenity. Even the loss of trust in the water defense system is a serious, but difficult to quantify the effect.

However, for practical reasons, the notion of risk in a societal context is often reduced to total number of casualties using a definition as "the relation between frequency and the number of people suffering from a specified level of harm in a given population from the realisation of specified hazards". If the specified level of harm is limited to loss of life, the societal risk may be modelled by the frequency of exceedance curve of the number of deaths, called the FN-curve (see also [10]). Obviously, if dike improvement is relatively expensive a higher probability of flooding will be accepted. On the other hand if the consequence of flooding is relatively substantial one will aim for a smaller probability. Moreover, the environmental consequences of flooding and the potential effects on nature and cultural heritage should also play an increasing role in assessing the required scale of flood protection. Image of the country as a safe place to live, works, and invest is finally at stake. This justifies a fundamental reassessment of the acceptability of the flood risks in view of the costs of improvement.

From literatures, the acceptance of risk should be studied from three different points of view in relation to the estimation of the consequences of flooding. The first point of view is the assessment by the individual. Attempts to model this are not feasible therefore it is proposed to look to the preferences revealed in the accident statistics. The probability of losing one's life in normal daily activities such as driving a car or working in a factory appears to be one or two orders of magnitude lower than the overall probability of dying. Only a purely voluntary activity such as mountaineering entails a higher risk (see [11]).

Another point of view concerns the assessment by society. The judgment of the societal risk due to a certain activity should be made on a national level. The determination of the socially acceptable level of risk assumes also that the accident statistics reflect the result of a social process of risk appraisal and that a standard can be derived from them. In addition to that the formula should account for risk aversion in a society. Relatively frequent small accidents are more easily accepted than one single rare accident with large consequences like a flood, although the expected number of casualties is equal for both cases. The standard deviation of the number of casualties reflects this difference.

The problem of the acceptable level of risk can be also formulated in a way of economically cost benefit analysis (CBA). The expenditure I for a safer system is equated with the gain made by the decreasing present value of the risk. The optimal level of safety indicated by $P_{f\text{-opt}}$ corresponds to the point of minimal cost:

$$\min(Q) = \min\left[I(P_f) + PV(P_f * S) \right] \tag{12}$$

The present value of the expected damage PV may be estimated conforming equation (9):

$$PV(P_f * S) = P_f * S * \sum_{i=0}^{i=n} \frac{1}{(1+r)^i} \tag{13}$$

where Q refers to the total cost, P_f is probability of failure per year; S is damage in case of failure; r is real rate of interest, n is number of years of planning period.

Cost-benefit analysis in principle is limited to quantifiable aspects of the decision with all consequences of flooding are measured in monetary terms. In reality, there are several dimensions of flooding risk that can in principle be quantified, but not necessarily in monetary terms. An important aspect that falls in this group is the risk of loss of life due to flooding. Furthermore, it is observed that disastrous events become less acceptable to the general public if the magnitude of the consequences is larger. This behaviour is referred to as risk aversion.

One way to deal with monetary and non-monetary aspects of flood protection is to define constraints on the solution space, which limits the range of acceptable flooding probabilities to values that are deemed acceptable in the light of the non-monetary consequences of flooding. Observed risk aversion may be included in the definition of the constraint ([11], [10]).

Discussions: In many cases, a required failure probability is not yet defined. For instance the case when a design is made for a situation where no regulation is available or when an analysis is performed in a process of defining/redefining required safety levels.

On basis of risk analysis the acceptable probability of failure can be defined by comparing the cost of protection to a characteristic value of the consequences of flooding. In a purely economical sense this leads to a risk-based cost-benefit analysis. In risk-based design, a model is established that provides a measure of the effectiveness of the protection system as a function of its failure probability. The two main components of such a model are the cost of protection and a characteristic value of the consequences of flooding, both as a function of the probability of failure.

3 Application of the methods to coastal defences in Vietnam

3.1 Case study description

Vietnam is affected regularly by substantial suffering due to sea and river floods. The most severe floods occur during high river discharges and during, and shortly after, typhoons from the South China Sea. Since 1996, Vietnam was affected by several flood disasters, each of those responsible for the loss of hundreds of lives and considerable damage to infrastructure, crops, rice paddy, fishing boats and trawlers, houses, schools, hospitals, etc. The total material damage of the flood disasters, on averaged, exceeded USD 1 billion in these years, which was accompanied by the loss of almost over 1000 lives (UNDP, 2005).

A selected case study in this paper is a new sea dike system of in Hai Hau district, Namdinh province, Vietnam. Total length of the Haihau sea defence system includes around 32 kilometres of sea dikes and 14 dike crossing structures i.e. sluices and pumping stations. Due to Damrey Typhoon 2005 several dikes section of Namdinh were breached (some 10 kilometers), including some Haihau seadike sections [6]. In attempt of rehabilitation of the sea dike system, a new design cross section was introduced by MARD and Haihau is selected as a pilot locations. Representative of the new design cross section of the sea dikes is on Fig. 2. It is necessary to check with the new design method to see if current

rehabilitation works provided enough safety according to the present safety regulation and if safe is safe enough for current Vietnamese situation.

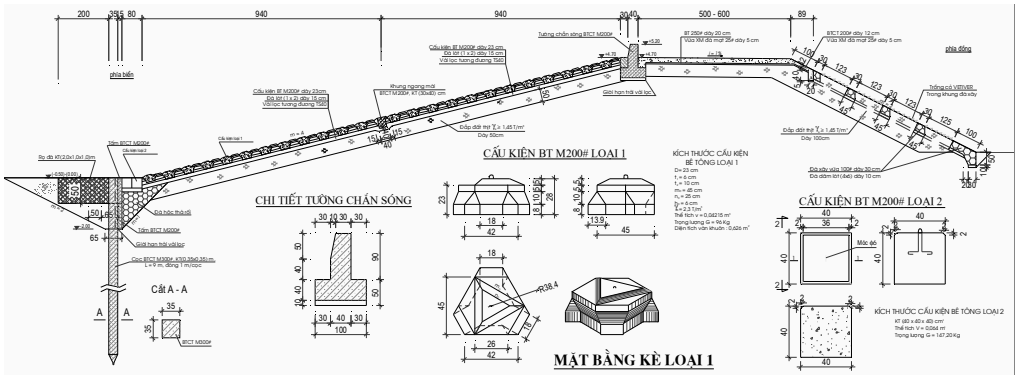

Fig. 2 Current design cross section of Hauhau seadikes 2005 [Namdinh DDMFC]

3.2 Application 1: Safety assessment and reliability based optimal design of dike geometry

3.2.1 Reliability safety assessment of the dike section

Follows the method given above, the reliability of Namdinh sea dike system is conducted from reliability analysis. All possible failure mechanisms in previous section will be analysed for Hai Hau case based on given above limit state functions. Using level III method Monte Carlo simulation the failure probability of possible failure modes are tabulated in Tab. 1.These results will be used as input of fault-tree analysis in the next section.

Total length of Hai Hau sea dikes is 32 kilometers. It is naturally divided into 7 sections which belong to 7 commutes along. The failure probability of the whole system is obtained by Eq. 9 & 10. It gives P_f^{system}=0.19≈1/5 years. From the actual sea dike design standard of Vietnam the required safety level is [P^{system}]=1/20=0.05. Applying equation (18) the acceptable failure probability of a single section is $P_f^{sec.}$=0.0186 ≈ 1/55 years.

3.2.2. Reliability based optimization of dike geometry

Assuming that proportion of every failure mechanisms contributes to the total failure probability of a section is similar to the previous case. The failure probability of each failure mechanism can be derived from $P_f^{sec.}$. Since acceptable probability of the failure is known, applying reliability-based approach, the design parameter can be determined. In this case, $P_f^{sec.}$=0.0186, the design values of interested parameters are obtained in Tab. 1. For current sea dike design in Vietnam the safety level regulated in design code is applied as design safety level of a representative cross-section.

Tab. 1 Failure probability vs. failure mode and the design values of interested parameters per mechanism

F.M.	Descriptions	P_f [year^{-1}]	important	optimal design
a	Overflowing	3.81E-03	12.80%	
b	Excessive wave overtopping	1.30E-02	43.69%	Z_{crest} [m]=8.60
c	Instability of armour unit	6.25E-03	21.00%	D_{n50} [m]=0.61
d	Geo instability of outer slope	3.10E-05	0.10%	
e	Geo instability of inner slope	5.70E-03	19.15%	Inner slope=2.75
f	Instability of toe elements	1.10E-03	3.70%	d_p [m]=2.92
g	Excessive toe erosion	1.89E-04	0.64%	h_{scour} [m]=1.34
h	Overall instab. of toe structure	1.00E-02	0.64%	
i	Piping condition 1	6.57E-04	0.00%	
j	Piping condition 2	9.00E-12	0.00%	
Sec	Section failure probability	2.97E-2 with bounds of 4.15E-5 [year^{-1}]		
System	System failure probability	0.19 [year^{-1}] *(take into account the length effect)*		

3.3 Application 2: Risk based design in determination of optimal flood protection level

The considerations in the previous sections mainly concern a general explanation of the principles of probabilistic design and risk analysis of water defenses. A strict application of these principles to the Vietnamese water defense system requires the assistance of specialists in the field of probabilistic engineering. However, in order to become familiar with the probabilistic approach to the design of water defences, a common engineer may start with simplified calculations, which do not require that much specialist knowledge. These calculations may concern several polders, considering each

polder as an independent part of the total polder system. Each polder will require its own, independent calculation. A procedure for the simplified calculation for a single polder is given in steps below.

In the first instance all failure mechanisms apart from overtopping will be neglected. In most cases excessive wave overtopping is the major cause of failure of dikes [6]. The hydraulic loads by sea and river(s) should be expressed by means of probability of exceedance curves, describing the loads as a function of the return period.

Choose several return periods, for example 10, 50, 100, 500, 1000 and 10000 years. Design dike crest levels which correspond to these return periods, by means of the exceedance curves of the hydraulic loads and estimations of local wave run up during high water levels. Make designs for the required improvements of the present dike ring, each design corresponding to one of the designed dike crest levels. Estimate the costs of the realization of the improvements and calculate the failure probability of each design alternative. Estimate the damage in case of failure of the dike ring and flooding of the polder. After all, the total costs for each alternative is determined. The total cost of a design consists of the sum of the cost $I(P_f)$ for adjustment of the present dike ring to the designed dike crest level and the present value of the expected damage P_f*S caused by flooding (see Eq. 13).

The demonstration of analysis results for the case of Hai Hau sea dikes are on Fig. 3. This example takes an verage rate of interest r=0.08 (as current situation of Vietnam) and an average damage USD 500 millions in case of failure of the dike ring under consideration (similar to the damage of the Damrey typhoon 2005 [3]).

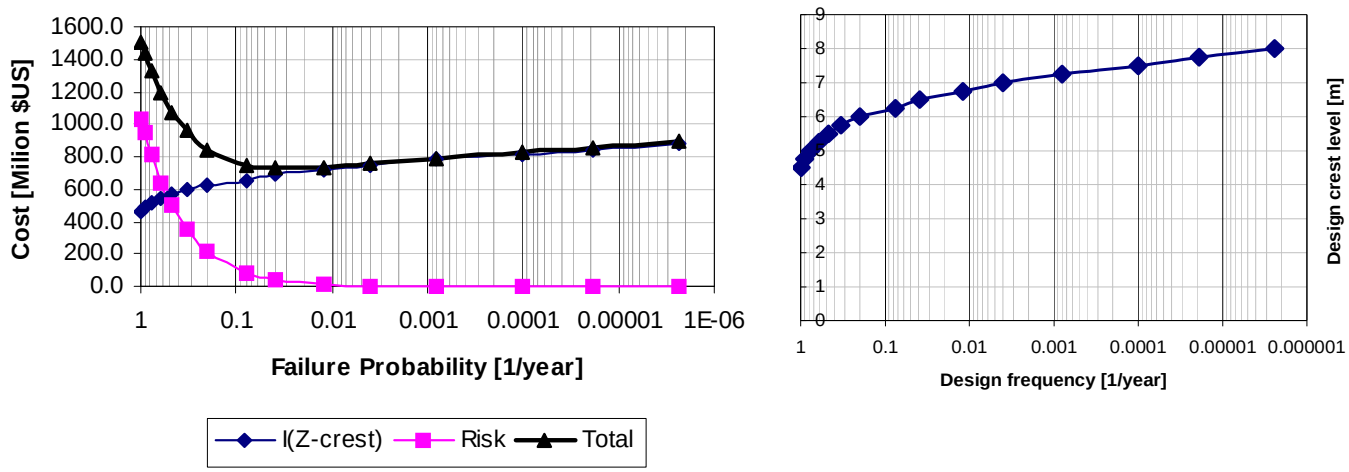

Fig. 3 Risk based otimal safety levels

The optimal level of safety corresponds to the point of minimal total cost. Therefore the design of the considered dike system should be based on a return period 30 years (coressponding to a design crest level of 6.50 meters). A supplementary design for a return period 100 years might turn out to be an even better choice. Selection of the design retuturn periods is less than 25 years leads to very high expenses for the repair of damages and is therefore a bad choice in this situation.

Actually, for Vietnamese situation of flood defences and coastal protection, the safety levels were set by design frequencies from national code, which varies by locations and importance of the elements. It is known as a fixed values and indicated in National Design Standards (i.e. for provincial sea dike is 1/20 years, river dike 1/25 years), [5]. These safety levels were selected approximately 30 years ago. Due to significant changes of social, economic situation during the last 30 years it is necessary to update these design safety levels and safety regulations. Example of Hai Hau sea dikes in this paper shows that it is applicable to derive such a framework of risk analysis and risk-based design in Vietnamese situation.

4 Conclusions

This study presents and reviews partially the methods of probabilistic reliability and risk based approaches with applications in the field of sea flood defences and coastal protection. The reliability based design is an essential design tool for flood defence and coastal protection when having a pre-defined failure probability and the geometry of the structure needs to be found in order to fulfill the design requirement in combination with minimisation of the construction cost of the system. On the other hand, if the geometry of every component of the flood defence system is known and the joint probability distribution of load and strength variables is quantified, the probability of failure of the system can be found. This can be applied for technical management purpose to determination of safety levels of any existing system and to find out the weaker/weakest points of the system.

In risk-based design the effectiveness of the protection system as a function of its failure probability can be modeled. The two main components of the model are the cost of protection and a characteristic value of the consequences of flooding, both as a function of the probability of failure. This model could be a powerful tool supporting decision process to set (or re-set) the safety levels of protection in relation to investment levels and acceptable consequences for any scale of protection system. This framework can be applied widely in other types of structured system in civil engineering.

Application of reliability and risk analysis for study case of Hai Hau gives interesting results. The actual relative low safety level of the whole system were figured out. Analysis shows that the failure may occur at once every 5 years at the existing new design dike system and once in every 33 years. The actual safety levels are unacceptable in term of the whole system but accepted for a single dike section if according to present Vietnamese design codes (once in every 20 years). The effect of system length to probability of failure is also indicated. From that one can realize that with 2-dimensional design (no consideration of system length) the actual safety level of whole system may reduce by factor 10 or more!

Reliability and risk analysis in the field of flood denfence and coastal protection has been developing effectively in some developed countries. Applying this modern approach in the same field in developing countries, therefore, should be implemented. Especially for the country where the safety levels of the actual flood protection are relatively low and safety regulations are not usually clear defined. A general framework of implementation of state of the art is thus important. Specific reliability and risk based models should be developed in those countries which should account for some developing characteristics (e.g. limited initial investment, cheaper man power, fast economic growing) and some limitations of data availability, lack of modern construction equipments, poor professional knowledge etc.

References

[1] Bakker, W.T, Vrijling J.K., 1980. Probabilistic design of sea defences. *Proceedings International Conference on Coastal Engineering 1980.*

[2] CUR/TAW, 1990. Probabilistic design of flood defences. Report 141, Gouda, Netherlands.

[3] Disaster management working group (DMWG)- Joint Assessment of Disaster needs 2005. Rapid Needs Assessment in Thanh Hoa, Ninh Binh and Nam Dinh provinces, hit by typhoon Damrey (STORM No. 7), 28-29 September 2005.

[4] Ditlevsen, O., 1979. Narrow reliability bounds for structural systems. *Journal of Structural Mechanics*, pp. 453-472.

[5] Mai, C.V., 2004. Safety assessment of sea dike in Vietnam, M.Sc-thesis. Unesco-IHE, Delft, The Netherlands, 2004.

[6] Mai, C.V., van Gelder, P.H.A.J.M., & Vrijling, J.K., 2006. Safety of coastal defences and flood risk analysis. *Safety and Reliability for Managing Risk*, ISBN 13: 978-0-415-41620-7, Taylor & Francis/Balkema, Leiden, The Netherlands, Vol. 2, pp. 1355-1366.

[7] Oumerarci, H., Allsop, N.W.H., Groot, M.B. de, Crouch, R., Vrijling, J.K., Kortenhaus, A., Voortman, H.G., 2001. Probabilistic design tools for vertical breakwaters. Balkema, Rotterdam, 2001.

[8] Rackwitz, R., 1977. First Order Reliability Theories and Stochastic Models. *Proceedings ICOSSAR '77.*

[9] Voortman, H.G., 2002. Risk-based design of large-scale flood defence systems. *Phd-thesis*. Delft University of Technology.

[10] Vrijling, J.K., Hengel, W.van & Houben, R.J. 1998. Acceptable risk as a basic for design. *Journal of Reliability Engineering and System Safety,* pp. 141-150. Elsevier 1998.

[11] Vrijling, J.K., Wessels, J.F.M., Hengel, W. Van. & Houben, R.J. 1993. What is acceptable risk? Delft University of Technology and Bouwdienst RWS, Delft 1993.

[12] Vrijling, J.K. 2001. Probabilistic design of water defense systems in The Netherlands. *Journal of Reliability Engineering & System Safety*, Volume 74, Issue 3.