CEN/TC 250/SC 7
Eurocode 7 - Geotechnical design

Email of secretary: carloes.pollemans@nen.nl
Secretariat: NEN (Netherlands)

prEN 1997-3 Geotechnical design - Geotechnical structures (final PTs draft, 2019-10)

Document type: Other draft

Date of document: 2019-11-04

Expected action: COMM

Action due date: 2020-01-31

Background:

Committee URL: https://cen.iso.org/livelink/livelink/open/centc250sc7

CEN/TC 250

Date: 202x-10

prEN 1997-3:202x

CEN/TC 250

Secretariat: NEN

Eurocode 7: Geotechnical design — Part 3: Geotechnical structures

Eurocode 7 - Entwurf, Berechnung und Bemessung in der Geotechnik — Teil 3: Geotechnische Bauten

Eurocode 7 - Calcul géotechnique — Partie 3: Constructions géotechniques

ICS:

Descriptors:

Contents

Page

Drafting foreword by PTs 4 and 5

This document (prEN 1997-3:20xx) has been prepared by project teams M515/SC7.T4 and T5.

This document is the Final Draft of prEN 1997-3 (as required under Phase 2 of Mandate M/515).

This document is a working document.

Verbal forms are signified thus:

<REQ> signifies a requirement (verb form 'shall')

<RCM> signifies a recommendation (verb form 'should')

<PER> signifies permission (verb form 'may')

<POS> signifies a possibility (verb form 'can')

For ease of preparation of this draft, NOTES are numbered 1 … 100+ in this document. They will be re-numbered for the final draft in accordance with CEN's regulations (IR3) and TC250's drafting rules (N1250). There is therefore no need to comment on the numbering of NOTES in this draft.

European Foreword

[DRAFTING NOTE: this version of the foreword is relevant to EN Eurocode Parts for enquiry stage]

This document (EN 1997-3) has been prepared by Technical Committee CEN/TC 250 "Structural Eurocodes", the secretariat of which is held by BSI. CEN/TC 250 is responsible for all Structural Eurocodes and has been assigned responsibility for structural and geotechnical design matters by CEN.

This document will partially supersede EN 1997-1:2004.

The first generation of EN Eurocodes was published between 2002 and 2007. This document forms part of the second generation of the Eurocodes, which have been prepared under Mandate M/515 issued to CEN by the European Commission and the European Free Trade Association.

The Eurocodes have been drafted to be used in conjunction with relevant execution, material, product and test standards, and to identify requirements for execution, materials, products and testing that are relied upon by the Eurocodes.

The Eurocodes recognise the responsibility of each Member State and have safeguarded their right to determine values related to regulatory safety matters at national level through the use of National Annexes.

Introduction

Introduction to the Eurocodes

The Structural Eurocodes comprise the following standards generally consisting of a number of Parts:

- EN 1990 Eurocode: Basis of structural and geotechnical design
- EN 1991 Eurocode 1: Actions on structures
- EN 1992 Eurocode 2: Design of concrete structures
- EN 1993 Eurocode 3: Design of steel structures
- EN 1994 Eurocode 4: Design of composite steel and concrete structures
- EN 1995 Eurocode 5: Design of timber structures
- EN 1996 Eurocode 6: Design of masonry structures
- EN 1997 Eurocode 7: Geotechnical design
- EN 1998 Eurocode 8: Design of structures for earthquake resistance
- EN 1999 Eurocode 9: Design of aluminium structures
- <New parts>

Introduction to EN 1997

[Drafting note: This contains information formerly included in “Scope of EN 1997”]

EN 1997 is intended to be used in conjunction with EN 1990, which establishes principles and requirements for the safety, serviceability, robustness, and durability of structures, including geotechnical structures, and other construction works.

EN 1997 establishes additional principles and requirements for the safety, serviceability, robustness, and durability of geotechnical structures.

EN 1997 is intended to be used in conjunction with the other Eurocodes for the design of geotechnical structures, including temporary geotechnical structures.

EN 1997 establishes rules for the calculation of geotechnical actions.

Design and verification in EN 1997 are based on the partial factor method, prescriptive measures, testing, or the observational method.

Verbal forms used in the Eurocodes

The verb “shall" expresses a requirement strictly to be followed and from which no deviation is permitted in order to comply with the Eurocodes.

The verb “should” expresses a highly recommended choice or course of action. Subject to national regulation and/or any relevant contractual provisions, alternative approaches could be used/adopted where technically justified.

The verb “may" expresses a course of action permissible within the limits of the Eurocodes.

The verb “can" expresses possibility and capability; it is used for statements of fact and clarification of concepts.

National annex for EN 1997-3

This standard gives values within notes indicating where national choices can be made. Therefore, the national standard implementing EN 1997-3 can have a National Annex containing all Nationally Determined Parameters to be used for the design of building and civil engineering works to be constructed in the relevant country.

National choice is allowed in EN 1997-3 through the following clauses:

[Drafting note: list of clauses to be compiled by the Project Teams for the final version]

National choice is allowed in EN 1997-3 on the application of the following informative annexes.

[Drafting note: list of annexes to be compiled by the Project Teams for the final version]

The National Annex can contain, directly or by reference, non-contradictory complementary information for ease of implementation, provided it does not alter any provisions of the Eurocodes.

1 Scope

1.1 Scope of EN 1997-3

(1) EN 1997-3 provides specific rules to be applied for design and verification of certain types of geotechnical structures.

(2) EN 1997-3 is intended to be used in conjunction with EN 1997-1, which provides general rules for design and verification of all geotechnical structures.

(3) EN 1997-3 is intended to be used in conjunction with EN 1997-2, which provides requirements for assessment of ground properties from ground investigation.

(4) EN 1997-3 does not provide rules for design and verification of tunnels and underground openings.

1.2 Assumptions

(5) In addition to the assumptions given in ENs 1990 and 1997-1, the rules in EN 1997-3 assume that:

2 Normative references

EN 1997-1, Eurocode 7: Geotechnical design – Part 1: General rules.

EN 1997-2, Eurocode 7: Geotechnical design – Part 2: Ground properties.

EN ISO 16907-1, Earthworks – Part 1: Principles and general rules.

ISO 1707-1: 2017, Buildings and civil engineering works — Vocabulary, Part 1: General terms.

3 Terms, definitions, and symbols

3.1 Terms and definitions

For purposes of this document, the following terms and definitions apply.

[Drafting note: CEN rules require the following sentence to be included]

ISO and IEC maintain terminological databases for use in standardization at the following addresses:

- IEC Electropedia: available at www.electropedia.org
- ISO Online browsing platform: available at www.iso.org/obp

3.1.1 Common terms used in EN 1997-3

3.1.1.1 substructure

part of a structure wholly or mainly below the level of the adjoining ground or a given level

[SOURCE: ISO 6707-1: 2017]

3.1.1.2 superstructure

part of a structure above the substructure

[SOURCE: ISO 6707-1: 2017]

3.1.1.3 foundation

construction for transmitting forces to the supporting ground

[SOURCE: ISO 6707-1:2017]

3.1.1.4 deep foundation

foundation consisting of a pile or caisson that transfers loads below the surface stratum to a deeper stratum or series of strata at a range of depths

3.1.1.5 low-rise structure

warehouse sheds, factory buildings, or residential buildings up to three storeys high

[Drafting note: text to be aligned with definition given in EN 1997-1 or EN 1990]

3.1.1.6 high-rise structure

buildings and structures greater than three storeys high, including chimneys and towers

[Drafting note: text to be aligned with definition given in EN 1997-1 or EN 1990]

3.1.1.7 frost heave

the swelling of soil due to formation of ice within it

[SOURCE: ISO 6707-1:2017]

3.1.1.8 ground heave

the upward movement of the ground caused by either failure in the ground or by deformations due to stress relief, creep, or swelling

3.1.1.9 creep

increase in strain during sustained load

[SOURCE: ISO 6707-1:2017]

3.1.1.10 secondary consolidation

slow deformation of soil and rock mass because of prolonged pressure and stress; synonym for ‘creep’ in fine soils

3.1.2 Terms relating to slopes, cuttings, and embankments

3.1.2.1 earth-structure

civil engineering structure, made of fill material or as a result of excavation

[SOURCE: modified EN 16907-1:2016]

3.1.2.2 fill material

material used for the construction of an embankment

[SOURCE: EN 16907-1:2016]

3.1.2.3 slope

inclination of a ground or fill surface to the horizontal

[SOURCE: modified from ISO 6707-1:2017]

3.1.2.4 cut

void that results from excavation of the ground

[SOURCE: modified from ISO 6707-1:2017]

3.1.2.5 cutting

earth-structure created by excavation of the ground

[SOURCE: modified from EN 16907-1:2016]

3.1.2.6 cut slope

slope that results from excavation

3.1.2.7 embankment

earth-structure formed by the placement of fill

[SOURCE: modified from EN 16907-1:2016]

3.1.2.8 embankment slope

slope that results from the placement of fill

3.1.2.9 earthworks

civil engineering process that modifies the geometry of ground surface, by creating stable and durable earth-structures

[SOURCE: modified from EN 16907-1:2016]

3.1.2.10 excavation

result of removing material from the ground

[SOURCE: modified from ISO 6707-1:2017]

3.1.2.11 levee

embankment for preventing flooding

3.1.3 Terms relating to spread foundations

3.1.3.1 spread foundation

foundation that transmits forces to the ground mainly by compression on its base

3.1.3.2 footing

stepped construction that spreads the load at the foot of a wall or column

[SOURCE: ISO 6707-1: 2017]

3.1.3.3 pad foundation

spread foundation with usually rectangular or circular footprint

3.1.3.4 strip foundation

long, narrow, usually horizontal foundation

[SOURCE: ISO 6707-1: 2017]

3.1.3.5 raft foundation

spread foundation in the form of a continuous structural concrete slab that extends over the whole base of a structure.

[SOURCE: ISO 6707-1:2017]

3.1.3.6 caisson

hollow construction with substantial impervious walls that comprises one or more cells and is sunk into the ground or water to form the permanent shell of a deep foundation

[SOURCE: ISO 6707-1:2017]

3.1.3.7 adjusted elasticity method

method to evaluate the settlement of a spread foundation using elasticity theory with a simple formula and assuming the ground beneath the foundation is homogeneous and linear elastic

3.1.4 Terms relating to piled foundations

3.1.4.1 pile

slender structural member, substantially underground, intended to transmit forces into load-bearing strata below the surface of the ground.

[SOURCE: ISO 6707-1:2017]

3.1.4.2 bored cast-in-place pile

bored pile formed by continuous or discontinuous earthwork methods where the hole is subsequently filled with concrete

[SOURCE: ISO 6707-1:2017]

3.1.4.3 displacement pile

pile which is installed in the ground without excavation of material from the ground, except for limiting heave, vibration, removal of obstructions, or to assist penetration

[SOURCE: ISO 6707-1:2017]

3.1.4.4 driven pile

displacement pile forced into the ground by hammering, vibration or static pressure

[SOURCE: modified from ISO 6707-1:2017]

3.1.4.5 end bearing pile

pile that transmits forces to the ground mainly by compression on its base

NOTE 1. (to entry) The term 'mainly' implies at least 70 % to 80 % of the compression force applied to the pile is transmitted to the ground via its base.

[SOURCE: ISO 6707-1:2017]

3.1.4.6 friction pile

pile transmitting forces to the ground mainly by friction between the surface of the pile and the adjacent ground

NOTE 1. (to entry) The term 'mainly' implies at least 70 % to 80 % of the compression or tension force applied to the pile is transmitted to the ground by friction between the pile shaft and the ground.

[SOURCE: ISO 6707-1:2017]

3.1.4.7 pile cap

construction at the head of one or more piles that transmits forces from a structure to one or several piles

[SOURCE: ISO 6707-1:2017]

3.1.4.8 piled foundation

foundation that incorporates one or more piles

[SOURCE: ISO 6707-1:2017]

3.1.4.9 pile group

foundation that incorporates piles arranged in a grid

3.1.4.10 piled raft

combined foundation that incorporates a ground bearing raft foundation and a pile group with forces from the structure shared between raft and piles

3.1.4.11 Method A (Ground Model Method)

calculation method based on a Geotechnical Design Model comprising various strata with assigned ground parameters that can be ascribed to either the whole or part of the project site area

3.1.4.12 Method B (Model Pile Method)

calculation method based on a single profile of field tests with assigned ground parameters relevant just to the local profile and not to the whole project site area

3.1.4.13 downdrag (negative shaft friction)

situation where the ground surrounding a pile settles more than the pile shaft sufficient to induce a downward drag force that potentially results in drag settlement

3.1.4.14 drag force

additional axial force in a pile due to downdrag

3.1.4.15 drag settlement

additional settlement of a pile due to downdrag

3.1.4.16 neutral plane

depth at which there is no relative movement between the pile and the surrounding ground corresponding to the point where the pile settlement equals the ground settlement

3.1.4.17 pile heave

upward movement of the ground surrounding a pile that can result in a heave load developing on the pile shaft, tension load within the pile shaft, and upward movement of part or all of the pile

3.1.4.18 trial pile

pile installed before the commencement of the main piling works or a specific part of the works for the purpose of investigating the appropriateness of the chosen type of pile and for confirming its design, dimensions and resistance

3.1.4.19 working pile

pile that will form part of the foundation of the structure

3.1.4.20 test pile

trial pile or working pile to which loads are applied to determine the compressive load-displacement behaviour of the pile and the surrounding ground

3.1.4.21 investigation test

load test carried out on a trial pile before commencement of the main piling works for the purpose of establishing the ultimate resistance either as validation of pile design carried out by calculation or other means, or as verification of pile design by load test

3.1.4.22 control test (also known as suitability test)

load test carried out on a working pile during the main piling works to a specified load in excess of its serviceability limit state for the purpose of verifying acceptable pile movement

3.1.4.23 acceptance test

test used to verify acceptance of a working pile

NOTE 1. (to entry) Acceptance tests for piles include non-destructive integrity tests (to confirm the as-built condition of the pile shaft) and concrete or grout tests (such as cube or cylinder strength tests to confirm that the pile materials conform to acceptance criteria)

3.1.4.24 pile load

axial compressive, tensile, or transverse load (or force) applied to the head of the pile

3.1.4.25 pile test proof load

a maximum proposed test load required for a compression, tension, or transverse load test which takes into account the imposed action plus allowances for drag force (which may act in reverse under temporary loading conditions) or transverse ground load caused by moving ground, together with any temporary support resulting from particular conditions of the test such as variations in groundwater, pile head level or pile head restraint under service conditions

3.1.4.26 temporary support load

load representing the temporary support from the ground to a pile under load test resulting from particular conditions of the test such as variations in groundwater, pile head level or pile head restraint that may reverse, reduce or change under service conditions

3.1.4.27 static load test

load test in which a single pile is subject to a series of axial static loads in order to define its load-displacement behaviour

[SOURCE: adapted from EN ISO 22477-1:2018]

3.1.4.28 dynamic load

axial compressive impact load (or force) applied to the head of a pile by a driving hammer or drop mass

[SOURCE: EN ISO 22477-4:2018, 3.1.5]

3.1.4.29 dynamic load test

test where a pile is subjected to chosen axial dynamic load at the pile head to allow the determination of its compressive resistance

[SOURCE: EN ISO 22477-4:2018, 3.1.7]

3.1.4.30 dynamic impact test

pile test with measurement of strain, acceleration and displacement versus time during the impact event

[SOURCE: EN ISO 22477-4:2018, 3.1.8]

3.1.4.31 rapid load

force applied to the pile in a continuously increasing and then decreasing manner of a suitable duration (typically less than 1 s) relative to the natural period of the pile which causes the pile to compress over the full length and translate approximately as a unit during the full loading period

[SOURCE: EN ISO 22477-10:2016, 3.1.5]

3.1.4.32 rapid load test

pile load test where a pile is subjected to chosen axial rapid load at the pile head for the analysis of its capacity (compression resistance)

[SOURCE: EN ISO 22477-10:2016, 3.1.8]

3.1.4.33 bi-directional load test

static load test using an embedded jack where a section of the pile is used as reaction to load another section

NOTE 2. (to entry) It is possible to install one or more levels of jacks in the pile shaft

3.1.4.34 ultimate compressive resistance of a pile

corresponding state in which the piled foundation displaces significantly with negligible increase of compression resistance

3.1.4.35 driving formulae

formula that relates impact hammer energy and number of blows for a unit distance or permanent set for a single blow to pile compressive resistance

[SOURCE: EN ISO 22477-4:2018, 3.1.9]

3.1.4.36 wave equation analysis

analysis of a dynamically loaded pile by a mathematical model that can represent the dynamic behaviour of the pile by the progression of stress waves in the pile and the resulting response of the ground

[SOURCE: EN ISO 22477-4:2018, 3.1.10]

3.1.4.37 closed form solution

mathematical analysis of the dynamic load test data based on closed form wave analysis equations to derive a mobilised load

3.1.4.38 signal matching

numerical analysis to evaluate the shaft and base resistance of the test pile by modelling the pile and ground with assumed parameters to closely match the measured signals of pile head strain, displacement and acceleration obtained during a dynamic load test

[SOURCE: EN ISO 22477-4:2018, 3.1.11]

3.1.4.39 re-driving

measurement of driven pile set or resistance carried out some time after pile installation

3.1.4.40 pile set

permanent pile settlement after one hammer impact blow during driving or dynamic impact testing

3.1.4.41 pile set-up

time-dependent increase in pile resistance

3.1.4.42 competent rock

rock with sufficient strength and stiffness to withstanding an applied static or dynamic load under given conditions without failure or any significant permanent movement

3.1.4.43 load transfer platform

coarse layer of fill constructed with or without soil reinforcement used to spread the load from an overlying structure such as a spread foundation, raft or embankment to improved ground, stone columns, vibro concrete columns, rigid inclusions, soil mix columns or piles

3.1.5 Terms relating to retaining structures

3.1.5.1 retaining structure

structure that provides lateral support to the ground or that resists pressure from a mass of other material

3.1.5.2 gravity wall

retaining structure of stone or plain or reinforced concrete having a base footing with or without a heel, ledge or buttress. The weight of the wall itself, sometimes including stabilising masses of soil, rock or backfill, plays a dominant role in the support of the retained material.

3.1.5.3 embedded wall

relatively thin retaining structure of steel, reinforced concrete, or timber that is supported by anchors, struts or passive earth pressure. The bending stiffness of such walls plays a significant role in the support of the retained material while the role of the weight of the wall is insignificant.

NOTE 1. (to entry) This definition includes structures that do not reach below the final excavation level, even if they cannot formally be considered as embedded

3.1.5.4 composite retaining structure

retaining structure composed of elements of gravity and embedded walls.

NOTE 1. (to entry) A large variety of such structures exists and examples include double sheet pile wall cofferdams, gabion walls, crib walls, earth structures reinforced by grouting.

NOTE 2. (to entry) Earth structures reinforced by tendons, geotextiles, and structures with multiple rows of soil nails are considered as soil reinforcement (see 3.1.7).

3.1.5.5 soldier pile wall (also known as Berlin wall)

<definition to be added>

3.1.5.6 combined wall

embedded wall composed of primary and secondary elements

3.1.6 Terms relating to anchors

3.1.6.1 anchor

structural element capable of transmitting an applied tensile load from the anchor head through a free anchor length to a resisting element and finally into the ground

3.1.6.2 grouted anchor

anchor that uses a bonded length formed of cement grout, resin or similar material to transmit the tensile force to the ground

NOTE 1. (to entry) A ‘grouted anchor’ in EN 1997-3 is termed a ‘ground anchor’ in EN 1537.

3.1.6.3 permanent anchor

anchor with a design service life which is in excess of two years

3.1.6.4 temporary anchor

anchor with a design service life of two years or less

3.1.6.5 tendon

part of an anchor that is capable of transmitting the tensile load from the anchor head to the resisting element in the ground

3.1.6.6 fixed anchor length

designed length of an anchor over which the load is transmitted to the surrounding ground through a resisting element

3.1.6.7 free anchor length

distance between the proximal end of the fixed anchor length and the tendon anchorage point at the anchor head.

3.1.6.8 tendon bond length

(for grouted anchors only) length of the tendon that is bonded directly to the grout and capable of transmitting the applied tensile load

3.1.6.9 tendon free length

length of the tendon between the anchorage point at the anchor head and the proximal end of the tendon bond length

3.1.6.10 apparent tendon free length

(for grouted anchors only) length of tendon which is estimated to be fully decoupled from the surrounding grout and is calculated from the load-elastic displacement data following testing

3.1.6.11 investigation test

load test to establish the geotechnical ultimate load resistance of an anchor at the interface of the resisting element and the ground and to determine the characteristics of the anchor in the working load range

[SOURCE: EN ISO 22477-5:2018, 3.1.6]

3.1.6.12 suitability test

load test to confirm that a particular anchor design will be adequate in particular ground conditions

[SOURCE: EN ISO 22477-5:2018, 3.1.9]

3.1.6.13 acceptance test

load test to confirm that an individual anchor conforms with its acceptance criteria

[SOURCE: EN ISO 22477-5:2018, 3.1.1]

3.1.6.14 lock-off load

load with which pre-stressible anchors are fixed to realise an active force to limit deformation

3.1.6.15 Test Method 1

cyclic load test, as specified in EN ISO 22477-5 as Test Method 1

[SOURCE: EN ISO 22477-5:2018, 8]

3.1.6.15 Test Method 3

maintained load test, as specified in EN ISO 22477-5 as Test Method 3

[SOURCE: EN ISO 22477-5:2018, 10]

3.1.7 Terms relating to reinforced ground

3.1.7.1 reinforced soil structures

engineered soil structures incorporating at least one layer of soil reinforcement

NOTE 1. (to entry) Soil reinforcements are placed horizontally or sub-horizontally and interact with the surrounding soil mainly through shear stresses at the soil/reinforcement interface and/or action against the elements of the reinforcement

3.1.7.2 reinforced fill structures

engineered fill structures incorporating layers of soil reinforcements which are arranged between successive layers of fill during construction

3.1.7.3 soil nailed structures

engineered cut-faced or existing structures incorporating layers of soil reinforcements which are installed into the ground, usually at a sub-horizontal angle, and that mobilise resistance with the soil along their entire length

NOTE 1. (to entry) They are typically arranged in rows. For cut-faced applications the rows are usually placed between successive passes of soil excavation in front of one face of the structure.

3.1.7.4 bolt structures

structures that are explicitly designed to reinforce the ground and not to transmit any external loads, that include grouted and non-grouted rock bolts, anchors, fore poling and spiling elements

3.1.7.5 basal reinforcement to embankments

fill structures incorporating at their base level at least one layer of soil reinforcements, commonly used for fills founded on weak or soft soils and fills founded on inclusion networks, or for fills overbridging voids

3.1.7.6 soil veneer reinforcement

use of soil reinforcement to prevent the sliding of the cover soil layer over a landfill lining or cover system, or any other low friction interface

3.1.7.7 tie back wedge method

method of analysis of reinforced soil structures that follows basic design principles currently employed for classical or anchored retaining walls

3.1.7.8 coherent gravity method

method of analysis of reinforced soil structures based on the monitored behaviour of a large number of structures using inextensible reinforcements, corroborated by theoretical analysis

<Refer to ISO 10318-2 for Geosynthetics>

Refer to ISO 10318-1 for GSY

Refer to EN 10025-2 for steel strips

Refer to EN 10080 for welded wire mesh, ladders or rods

Refer to EN 10223-3 for polymer coated steel woven wire mesh

(see Annex E – EN 14475 for steel reinforcements)

3.1.8 Terms relating to ground improvement

3.1.8.1 ground improvement

modification of the ground or its hydraulic conductivity in order to bring the effects of actions within ultimate and serviceability requirements

NOTE 1. (to entry) Ground improvement can be achieved by reducing or increasing hydraulic conductivity, binding or densifying the ground, filling voids, or creating inclusions in the ground.

3.1.8.2 ground improvement zone

volume of ground within which ground improvement is installed and results in modified ground properties

3.1.8.3 inclusion

elements installed in the ground with defined geometry and material properties sufficiently different from the surrounding ground as to modify the distribution of load, stress and groundwater flow within the ground improvement zone

3.1.8.4 rigid inclusion

inclusions with higher stiffness and a measurable unconfined compressive strength

3.1.8.5 discrete ground improvement

ground improvement zone comprising inclusions created in the ground with properties differing from the surrounding ground

3.1.8.6 diffused ground improvement

ground improvement where the ground improvement zone can be modelled with a single set of parameters

NOTE 1. (to entry) In certain cases where ground improvement zone are created that are limited in extent but comprise a diffused form of ground improvement then the interaction of the body with the other geotechnical units should be considered. This could be shear or down drag caused at the interface of the ground improvement zone and the geotechnical units. Such zones could be blocks of ground improved to support foundations or buildings etc

3.1.8.7 area ratio

ratio of the improved ground to the total area comprising improved and unimproved ground

NOTE 1. (to entry) The area ratio of diffused ground improvement is 1.

3.1.8.8 load distribution

subdivision of the total load into the share transferred by the inclusion and the share transferred by the soil and varying throughout the treated volume and/or along the axis of the inclusion

NOTE 1. (to entry) The load distribution is a determined by calculation and is an integral part of the design of discrete ground improvement.

3.1.8.9 execution design

design of ground improvement installation to achieve the objectives of the ground improvement performance

3.2 Symbols and abbreviations

3.2.1 Common symbols and abbreviations used in EN 1997-3

$c_{\mathrm{min,dur}}$	minimum concrete cover required for environmental conditions
CPT	Cone Penetration Test
MFA	material factor approach
P_{P}	proof load
PMT	Pressuremeter Test

RFA	resistance factor approach
SPT	Standard Penetration Test
Δc_{dev}	allowance in design for deviation of the concrete cover
$\gamma_{tan\varphi,cv}$	partial factor on the coefficient of internal friction of the ground under constant-volume conditions
$\gamma_{tan\varphi,res}$	partial factor on the coefficient of friction of the ground along a residual slip surface
$\varphi_{cv,k}$	characteristic value of the angle of internal friction of the ground under constant-volume conditions
$\varphi_{res,k}$	characteristic value of the angle of friction of the ground along a residual slip surface

3.2.2 Symbols and abbreviations relating to slopes, cuttings, and embankments

s_0	settlement caused by undrained shear
s_1	settlement caused by consolidation
s_2	settlement caused by creep
S_t	sensitivity of fine soil

3.2.3 Symbols and abbreviations relating to spread foundations

A'	effective foundation area (= $B' \times L'$)
b_c, b_q, b_γ	factors accounting for base inclination
B	foundation width (shorter dimension on plan)
B'	effective foundation width
d_c, d_q, d_γ	factors accounting for the depth of foundation embedment
d_s	rock discontinuity spacing
D	embedment depth
e	eccentricity of the resultant action, with subscripts B and L
g_c, g_q, g_γ	factors accounting for ground inclination
i_c, i_q, i_γ	factors accounting for load inclination
k	subgrade modulus
K_s	relative stiffness between the foundation and the ground

L	foundation length
L'	effective foundation length
m	exponent in bearing resistance formulae for the load inclination factor i
N	component of the total action acting normal to the foundation base
N_d	design value of N
N'_d	design value of the effective action acting normal to the foundation base
N_{rep}	representative value of N
N_c, N_q, N_γ	bearing resistance factors
q	overburden or surcharge pressure at the level of the foundation base
q'	the design effective overburden pressure at the level of the foundation base
R_{pd}	design value of the resisting force caused by earth pressure on the side of a foundation
s_c, s_q, s_γ	factors accounting for the shape of the foundation base
T	component of the total action acting transverse (parallel) to the foundation base
T_d	design value of T
α	the inclination of the foundation base to the horizontal
δ	ground-structure interface friction angle
δ_d	design value of δ
δ_{rep}	representative value of δ
γ_{Rh}	partial factor for sliding resistance
γ'_d	design effective weight density of the soil below the foundation level
θ	angle between the horizontal load, H and the direction L'

3.2.4 Symbols and abbreviations relating to piled foundations

L_{dd}	depth of the neutral plane corresponding to the point where the pile settlement equals the ground settlement
D_{rep}	representative drag load, heave, or transverse ground force
$D_{support}$	representative vertical or transverse temporary support force

R_c	compressive resistance of a pile
R_t	tensile resistance of a pile
R_s	pile shaft resistance
R_{st}	pile shaft resistance in tension
R_b	pile base resistance
$R_{c,rep}$	representative compressive resistance of a pile
$R_{t,rep}$	representative tensile resistance of a pile
$R_{s,rep}$	representative pile shaft resistance
$R_{st,rep}$	representative pile shaft resistance in tension
$R_{b,rep}$	representative pile base resistance
R_{cd}	design compressive resistance of a pile
R_{td}	design tensile resistance of a pile
R_{sd}	design pile shaft resistance
$R_{st,d}$	design pile shaft resistance in tension
R_{bd}	design pile base resistance
q_b	end bearing or base stress
$q_{s,i}$	shaft friction in the various strata i
τ_n	action effect of downdrag (negative shaft friction)
$\tau_{n,rep}$	representative action effect of downdrag (negative shaft friction)
$s_{spacing}$	centre-to-centre spacing of piles
s_{pile}	pile settlement with depth
s_{ground}	ground strata settlement profile (at any particular time)
d_{min}	minimum depth of investigation below the anticipated base of the piled foundation
D	base diameter (for circular piles) or one-third of the perimeter (for non-circular piles)
p	pile perimeter
p_{group}	smaller dimension of a rectangle circumscribing a group of piles

R_m	measured pile resistance
R_{cm}	measured compressive resistance of a pile
R_{tm}	measured tensile resistance of a pile
R_{sm}	measured pile shaft resistance
$R_{st,m}$	measured pile shaft resistance in tension
R_{bm}	measured pile base resistance
$R_{tr,m}$	measured pile transverse resistance
ξ_{mean}	correlation factor for mean values
ξ_{min}	correlation factor for minimum values

3.2.5 Symbols and abbreviations relating to retaining structures

a	soil adhesion in cohesive layers
E_i	initial tangent modulus in at-rest conditions
E_{ur}	unloading-reloading modulus
k	horizontal subgrade reaction coefficient
$K_{a\gamma}$, K_{aq}, K_{ac}	normal active earth pressure coefficients
$k_{a\gamma}$, k_{aq}, k_{ac}	inclined active earth pressure coefficients
$K_{ac,u}$, $k_{ac,u}$	active earth pressure coefficients for undrained conditions
$K_{p\gamma}$, K_{pq}, K_{pc}	normal passive earth pressure coefficients
$k_{p\gamma}$, k_{pq}, k_{pc}	inclined passive earth pressure coefficients
$K_{pc,u}$, $k_{pc,u}$	passive earth pressure coefficients for undrained conditions
k_δ	constant depending on the roughness of the ground structure interface and local disturbance during installation
K_0	at-rest earth pressure coefficient
p_a	component of the total active earth pressure normal to the wall face
p'_a	component of the effective active earth pressure normal to the wall face
p_p	component of the total passive earth pressure normal to the wall face

p'_p component of the effective passive earth pressure normal to the wall face

p_0 total at-rest earth pressure

p'_0 effective at-rest earth pressure

α angle of inclination of the surcharge

β inclination of the ground surface

δ angle of inclination of the earth pressure

λ inclination of the retaining wall

3.2.6 Symbols and abbreviations relating to anchors

E_d maximum design value of the effects of actions, including the effect of lock-off load, sufficient to prevent an ultimate or serviceability limit state in the supported structure

$E_{d,ULS}$ maximum design value of the effects of actions, including the effect of lock-off load, sufficient to prevent an ultimate limit state in the supported structure

$F_{d,SLS}$ design value of the maximum anchor force, including effect of lock off load, and sufficient to prevent a serviceability limit state in the supported structure

$F_{k,SLS}$ characteristic value of the maximum anchor force, including the effect of lock-off load, sufficient to prevent a serviceability limit state in the supported structure

$R_{d,SLS}$ design value of the resistance of an anchor at the serviceability limit state

$R_{d,ULS}$ design value of the geotechnical resistance of an anchor at the ultimate limit state

$R_{k,SLS}$ characteristic value of the geotechnical resistance of an anchor at the serviceability limit state

$R_{k,ULS}$ characteristic value of the geotechnical resistance of an anchor at the ultimate limit state

R_m measured value of the geotechnical resistance of an anchor

$R_m(\alpha)$ measured value of the geotechnical resistance of an anchor at the specified creep rate α

$R_{m,ULS}$ measured value of the geotechnical resistance of an anchor at the ultimate limit state

$R_{m,SLS}$ measured value of the geotechnical resistance of an anchor at the serviceability limit state

$R_{m,ULS,min}$ minimuim value of $R_{m,ULS}$

$R_{m,SLS,min}$ minimum value of $R_{m,SLS}$

R_{td} design value of the tensile resistance of the structural elements of an anchor

α_{SLS} creep rate defining the geotechnical resistance of an anchor at the serviceability limit state (determined from the displacement per log cycle of time at constant anchor load as defined in EN ISO 22477-5)

α_{ULS} creep rate defining the geotechnical resistance of an anchor at the ultimate limit state (determined from the displacement per log cycle of time at constant anchor load as defined in EN ISO 22477-5)

α_1 Limit value of the creep rate in Test Method 1

α_3 Limit value of the creep rate in Test Method 3

P_c critical creep load (determined as the load corresponding to the end of the pseudo linear part of the α versus load diagram as defined in EN ISO 22477-5)

P_o lock-off load

ξ_{ULS} correlation factor for ultimate limit state verification

$\xi_{a,ULS,test}$ correlation factor for ultimate limit state verification based on suitability tests

$\xi_{a,SLS,test}$ correlation factor for serviceability limit state verification based on suitability tests

$\gamma_{F,SLS}$ partial factor on the anchor force in serviceability limit state verification

$\gamma_{a,ULS}$ partial factor on the anchor resistance in ultimate limit state verification

$\gamma_{a,SLS}$ partial factor on the anchor resistance in serviceability limit state verification

$\gamma_{a,SLS,test}$ partial factor on the anchor resistance in serviceability limit state verification in acceptance tests

3.2.7 Symbols and abbreviations relating to reinforced ground

$a'_{gs,d}$ design value of the effective adhesion between the ground and geosynthetic reinforcement (also covers apparent adhesion caused by interlocking mechanism)

$a'_{sn,d}$ design value of the effective adhesion between the ground and a soil nail

$a'_{st,d}$ design value of the effective adhesion between the ground and steel reinforcement;

$A_{r,con}$ reduced cross-sectional area of steel reinforcement at a connection, taking account of the maximum anticipated loss of steel along the design service life of the structure ($A_{r,con} = A_{0,con} - \Delta A_{r,con}$)

$A_{0,con}$ initial cross-sectional area of steel reinforcement at a connection

A_0 initial cross-sectional area of steel reinforcement

A_r	reduced cross-sectional area of steel reinforcement, taking account of the maximum anticipated loss of steel during the design service life of the structure ($A_r = A_0 - \Delta A_r$)
b_{gs}	width of reinforcement per unit width (b_{gs} = 1 for continuous sheets)
b_{st}	width of strip reinforcement per unit width (b_{st} = 1 for grids)
D	bar diameter
f_s	reduction factor to allow for extrapolation uncertainty for given design service life
f_{uk}	characteristic ultimate tensile strength of steel reinforcement
K	earth pressure coefficient averaging the pressure around the whole circumference, $K = (1 + K_0)/2$
L_{int}	mobilized interface length
L_n	nail length
$q_{m,sn,pul}$	measured interface unit strength
$R_{d,gs,int}$	design tensile strength of the interface with the geosynthetic reinforcing element
$R_{d,st,int}$	design tensile strength of the interface with a steel reinforcing element
$R_{d,sn,int}$	design tensile strength of the interface with a soil nail element
$R_{m,sn,pul}$	measured pull-out force
$T_{gs,k}$	characteristic tensile strength of geosynthetic reinforcement
ΔA_r	maximum anticipated loss of steel area during the design service life of the structure
η_{ch}	reduction factor accounting for the adverse effects of chemical and biological degradation of the element
η_{cr}	reduction factor accounting for the adverse effect of tensile creep due to sustained static load over the design service life of the structure
η_{dmg}	reduction factor accounting for the adverse effects of mechanical damage during execution
η_{dyn}	reduction factor accounting for the adverse effects of intense and repeated loading over the design service life of the structure
η_{gs}	reduction factor for geosynthetic reinforcement accounting for potential loss of strength with time and other influences
η_w	reduction factor accounting for the adverse effects of weathering
γ_{gs}	partial material factor for geosynthetic reinforcement

$\gamma_{gs,int}$ partial resistance factor on interface strength of geosynthetic reinforcement

$\varphi'_{gs,d}$ design value of the effective angle of shearing resistance between the ground and geosynthetic reinforcement

$\varphi'_{sn,d}$ design value of the effective angle of shearing resistance between the ground and a soil nail

$\varphi'_{st,d}$ design value of the effective angle of shearing resistance between the ground and steel reinforcement

σ'_v effective vertical stress acting on the reinforcing element on the anchorage length

ξ_n correlation factor based on the number of tests and selected value of measured force

3.2.8 Symbols and abbreviations relating to ground improvement

<to be added>

4 Slopes, cuttings, and embankments

4.1 Scope

(1) <REQ> This clause shall apply to the design of cuttings, embankments and existing slopes within the zone of influence of construction works and activities.

NOTE 1. EN 16907 applies to the construction of earthworks, including cuttings and embankments.

(2) <REQ> This clause shall also apply to overall stability, local stability, and displacement of nearby structures and infrastructure within the zone of influence.

(3) <REQ> This clause shall also apply to dams and levees but excludes the verification of water retention of those structures.

4.2 Basis of design

4.2.1 Design situations

(1) <REQ> Design situations shall conform to EN 1997-1, 4.2.2.

(2) <REQ> Design situations for slopes, cuttings, and embankments shall include:

- construction and maintenance works and activities;
- existing failure surfaces, previous or continuing ground movements;
- human or animal activities;
- variations in water content or groundwater pressure;
- temperature effects including freezing and thawing of ground;
- dredging, erosion, or scour, including the effect of change in ground geometry;
- rapid drawdown of water level;
- the development of cracks in the ground and the effect of groundwater pressure and ice in cracks;
- <PT6 to add to this list with regard to rock >

(3) <REQ> All potential design situations including future transient or permanent changes that will alter the ground or groundwater conditions, vary the imposed loadings or alter the required behaviour during the working life of the earth-structure shall be taken into account.

(4) <REQ> The adverse effects of excess groundwater pressures depending on the rate of construction shall be considered.

4.2.2 Geometrical data

4.2.2.1 Ground surfaces

(1) <REQ> Adverse effects of deviations or imperfections, Δa, of geometrical parameters shall be considered in the design in accordance with EN 1990, 8.3.6, taking into account the behaviour of the ground or fill material during construction.

4.2.2.2 Water levels

(1) <REQ> Standing water, groundwater, and piezometric levels shall be determined according to EN 1997-1, 6.2.

(2) <REQ> Permanent and transient groundwater levels during construction and during the service lifetime of the structure shall be established, taking into account the changes in the ground geometry, drainage, and other conditions or structures that may change the groundwater flow.

4.2.3 Actions and environmental influences

4.2.3.1 General

(1) <REQ> Actions and environmental influences on slopes, cuttings, and embankments shall be determined according to EN 1997-1, 4.3.1.

(2) <RCM> When deriving actions, the difference between the stiffness of the ground and that of the structure or stabilizing measure should be considered.

(3) <RCM> Long-term settlement and movement in serviceability limit states should be verified using the quasi-permanent combination of actions specified in EN 1990, 8.4.5.4.

4.2.3.2 Dynamic and repeated actions

(1) <RCM> Actions due to loading from cranes, machinery, traffic and other sources that are applied repeatedly or vary in intensity should be identified for special consideration, in accordance with EN 1990, A.5.5.3, and EN 1997-1, 4.3.1.4(4).

(2) <RCM> The design of slopes and embankments subject to dynamic and cyclic loading should consider the following:

- occurrence of vibrations that can affect the earth-structure, surrounding structures, road, services and people;
- degradation of ground strength and stiffness;
- accumulated ground movement or settlement;
- amplification of loads or displacements owing to resonance.
- <PT6 to add to this list as necessary>

4.2.4 Limit states

(1) <REQ> In addition to the limit states specified in EN 1997-1, 8.2, the following ultimate limit states shall be verified for all types of slopes, cuttings, and embankments:

- loss of overall stability of the ground and structures within the zone of influence;
- loss of bearing resistance of embankments;
- excessive movements in the ground due to shear deformations, settlement, vibration or heave;
- structural failure in structures, roads, or services due to movements in the ground in the zone of influence;
- structural failure of stabilizing measures;
- the adverse effect of failure of drains, filters or seals;
- failure caused by surface erosion or scour;
- failure due to gradual degradation of ground strength or as a result of excessive movement;
- < special limit states for rock not covered above to be added>

(2) <RCM> Ultimate limit states other than those given in (1) should be verified as necessary.

(3) <REQ> In addition to the limit states specified in EN 1997-1, 9.1-9.3, the following serviceability limit states shall be verified for all types of slopes, cuttings, and embankments:

- settlement and horizontal ground deformation of embankments;
- creep in slopes during the freezing and thawing period;
- loss of serviceability in neighbouring structures, roads or services due to movements in the ground or to changes made to the groundwater conditions;
- accumulated ground movement or settlement due to creep;
- <add other specific serviceability limit states for rock>

(4) <RCM> Serviceability limit states other than those given in (3) should be verified as necessary.

4.2.5 Robustness

(1) <RCM> Drainage systems shall be considered to ensure the design groundwater level is not exceeded.

(2) <RCM> Monitoring should be used during the construction and where necessary during the service life for checking assumptions and minimum requirements in the design, in Geotechnical Categories 2 and 3, see 4.8.4.

(3) <RCM> Planned inspections should be used, both during the construction and during the service life, for checking assumptions and minimum requirements in the design, in Geotechnical Categories 2 and 3, see 4.8.4.

(4) <RCM> The adverse effects from possible climate change on groundwater level, ground temperature and precipitation during the service life of the earth-structure should be considered according to requirements set out by the relevant authority or for a specific project with the relevant parties. <propose move to part 1>

4.2.6 Ground investigation

(1) <REQ> Ground investigation for slopes, cuttings, and embankments shall conform to EN 1997-1, 4.1.9.2, and EN 1997-2.

(2) <REQ> The minimum number of ground profiles and their maximum plan spacing shall conform to EN 1997-2, depending on the Geotechnical Category.

(3) <RCM>The extent and the spacing of the ground investigation should investigate the zone of influence of the structure.

(4) <RCM> The zone of influence should be determined from the size and extent of the possible failure surface, the depth and magnitude of any vertical and horizontal stress change, the resultant ground strain, the possible occurrence of significant ground movements and the variability of the geotechnical conditions.

(5) <RCM>The depth of the ground investigation (z_a), see Figure 4.1, should be selected considering the following:

- the maximum depth of the excavation/cutting (h), of the embankment unless a stratum of high shear resistance is identified;

- 1,5 times the maximum height (h), of the embankment unless a stratum of high shear resistance is identified;
- the depth of any possible failure surface;
- for embankments, at least down to the bottom of the deepest fine soil layer (or layer of high compressibility) that could undergo consolidation settlement, depending on the depth of influence.

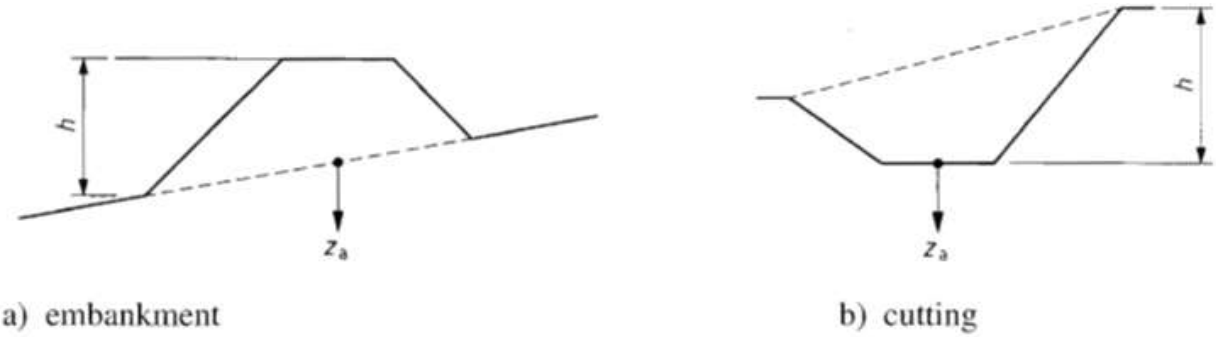

Figure 4.1 – Reference level for measuring the minimum depth of investigation

(6) <REQ> The groundwater level shall be determined where excavation beneath that level could occur.

NOTE 1. Excavation below groundwater level can cause reduction in ground strength, hydraulic heave, groundwater flow from the excavation face, internal erosion, piping or surface erosion of the slope.

<PT6 to add recommendations for rock mass investigation>

4.2.7 Geotechnical reliability

(1) <RCM> In addition to EN 1997-1, 4.1.2.3, the features given in Table 4.1 (NDP) should be considered when selecting the Geotechnical Complexity Class for slopes.

(2) <RCM> Cuttings should be classified in Geotechnical Category 2 or higher when the excavation extends below the groundwater table.

(3) <RCM> Embankments should be classified in Geotechnical Category 2 or higher when situated on fine soil susceptible to significant consolidation and creep settlement.

Table 4.1 (NDP) – Selection of Geotechnical Complexity Class for slopes, cuttings, and embankments founded in or on fill or soil

Geotechnical Complexity Class	Complexity	General features causing uncertainty
GCC 3	Higher	Considerable uncertainty regarding any of the following: • soils with very high sensitivity to disturbance/deformation (St>30); • possible progressive failure; • continuously moving ground of slopes; • potential presence of pre-existing failure surfaces; • difficult[a] deep excavation below groundwater level; • high hydraulic gradient with significant[a] seepage forces and /or significant[a] adverse effects of internal erosion or piping; • exposure to significant[a] erosion or scour that could lead to failure; • significant ongoing settlement that could lead to failure; • significant dynamic, cyclic, or seismic loads that could have adverse effects on the structure.
GCC 2	Normal	GCC2 should be selected if GCC1 and GCC3 are not applicable. Some of the following could apply: • ongoing ground settlement; • significant influence of frost or thawing period; • possible erosion or scour; • artesian groundwater level or pressure; • structures close to cuttings or slopes with limited risk of adverse effects.
GCC 1	Lower	Negligible risk of overall stability and damaging settlements. The following conditions apply for cuttings: • above the groundwater level and; • less than 1,0 m depth in fine-grained soils of very low undrained shear strength (c_u = 10-20 kPa) or; • less than 2,0 m depth in fine-grained soils of low undrained shear strength (c_u =20-40 kPa) or; • less than 3,0 m depth in coarse soil or fine-grained soils of at least medium undrained shear strength (c_u > 40 kPa) and; • slope inclination, vertical to horizontal, less than 1:2; • maximum 2 kPa external load[b] within 1,0 m of the slope crest and all other loads[b] are limited to 15 kPa or equivalent; • close to level ground (< 1:10) within the zone of influence of the cutting/excavation. All of the following conditions apply for embankments: • low embankment height (< 3,0 m) on competent ground; • close to level ground (< 1:10) within the zone of influence of the embankment
[a]the terms 'difficult' and 'significant' are relative to any comparable experience that exists for the particular geotechnical structure and design situation; [b]representative value		

Table 4.2 (NDP) – Selection of Geotechnical Complexity Class for slopes, cuttings, and embankments founded in or on rock

Geotechnical Complexity Class	Complexity	General features causing uncertainty
GCC 3	Higher	Considerable uncertainty regarding any of the following: • <to be added>
GCC 2	Normal	GCC2 should be selected if GCC1 and GCC3 are not applicable. Some of the following could apply: • <to be added>
GCC 1	Lower	Negligible risk of overall stability and damaging settlements. All the following conditions apply for cuttings: • <to be added> All the following conditions apply for embankments: • <to be added>
[a]the terms 'difficult' and 'significant' are relative to any comparable experience that exists for the particular geotechnical structure and design situation		

4.3 Materials

4.3.1 Ground properties

4.3.1.1 General

(1) <REQ> Ground properties shall be determined according to EN 1997-1, 5.1-5.4, and EN 1997-2.

(2) <RCM> The anisotropy of the soil should be considered when determining ground properties.

NOTE 1. Anisotropic strength of the ground is of special importance for cuttings due to the unloading and rotation of the principal stresses.

4.3.1.2 Properties of soil and fill

(1) <PER> In accordance with EN 1997-1, 4.2.2(4), drained or undrained soil or fill parameters (or a combination of both) may be used in the design of slopes, depending on the soil's hydraulic conductivity and the duration of any loading or unloading.

(2) <RCM> Potential reduction in strength caused by weather conditions during or after execution, in particular exposure and saturation of the ground and thawing of frozen ground, should be considered. <proposed for transfer to Part 1>

(3) <RCM> The following soil and fill parameters and field measurements should be considered as input for calculations of both overall and local stability:

- undrained shear strength of fine soils;
- effective shear strength;
- grain-size distribution;
- internal friction angle (peak, constant volume, or residual);
- weight density (dry, saturated, moist);

- groundwater pressure (groundwater level in coarse soil);
- sensitivity of fine soils;
- Atterberg limits of fine soils.

<add reference to EN 1997-2 where relevant under (3) and (4)>

(4) <RCM> The following soil and fill parameters and field measurements should be considered as input for calculations of settlement:

- pre-consolidation pressure in fine-grained soil;
- weight density (dry, saturated, moist);
- groundwater pressure (groundwater level in coarse soil);
- compressibility parameters;
- hydraulic conductivity;
- secondary compression index (creep).

4.3.1.3 Properties of rock and rock mass

(1) <RCM> The following rock and rock mass parameters and field measurements should be considered as input for calculation of both overall and local stability, as well as deformations:

- weight density;
- groundwater pressure;
- in-situ stresses;
- Young's modulus;
- Poisson's ratio;
- interface and discontinuity parameters according to 4.3.1.4.

4.3.1.4 Properties of interfaces and discontinuities

(1) <REQ> Properties of interfaces and discontinuities between and inside ground layers shall be considered.

(2) <RCM> The following parameters should be considered as input for calculation of both overall and local stability:

- geometrical constellation of interfaces and discontinuities (dip, direction, extent, location);
- qualitative descriptions such as alteration, weathering, roughness, smoothness;
- interface cohesion: peak and residual value;
- interface friction angle: peak and residual value;
- presence of infill and its infill parameters (including swelling capacity);
- water pressure inside the interface (cleft pressure), flux.

4.3.1.5 Properties of improved ground

(1) <RCM> Modified or additional parameters for improved ground and the determination of their representative values shall conform to Clause 10.

4.4 Groundwater

(1) <REQ> Design shall be based on the groundwater conditions that apply in the ground after execution and during the design service life of the cutting or embankment.

(2) <REQ> Assessment of the design groundwater level and pressure shall conform to EN 1997-1, 6.

4.5 Geotechnical analysis

4.5.1 General

(1) <REQ> The method to be used to verify the limit states of slopes, cuttings, and embankments shall be selected from the following:

- calculation based on the results of field or laboratory tests and measurements;
- for earth-structures in Geotechnical Category 1, comparable experience and observations; <PT6 to confirm whether this is an allowable approach for verifying ULS>;
- design assisted by testing to determine ground properties;
- a prescriptive measure, in which (for cuttings) a presumed slope angle and excavation depth or (for embankments) a limiting ground pressure is used;
- the Observational Method.

4.5.2 Failure mechanisms

(1) <REQ> All possible failure mechanisms shall be identified.

<Failure types/mechanisms for rock mass to be added here>

4.5.3 Verification by calculation

4.5.3.1 General

(1) <PER> The following calculation methods for slope stability may be used:

- limit-equilibrium methods;
- numerical methods according to EN 1997-1, 8;
- limit analysis;
- methods for rock slopes. <PT6: more detail to be added>

NOTE 2. Calculation methods for overall stability of soil and rock slopes are given in Annex A.

(2) <PER> Calculation methods for bearing capacity and settlement analysis given in Clause 5 may be used to verify that embankments do not exceed limit states.

(3) <PER> Verification of the heave due to excavation of a cutting may be carried out using calculation methods given in Clause 5 but treating the weight of the excavated material as a negative applied action.

4.5.3.2 Analysis of embankments

(1) <RCM> Analysis of embankments containing different materials should adopt strength and stiffness values that have been determined at compatible strains in the materials.

(2) <REQ> Where lightweight fill materials with a weight density less than that of water are used, the possibility of uplift due to buoyancy shall be considered

4.5.3.3 Stability of slopes and cuttings in fill and soil

(1) <REQ> For sloping ground in layered soils with considerable differences in shear strength or subjected to high external loads, the stability of non-circular failure surfaces shall be verified, paying attention to the layers with lowest shear strength.

(2) <RCM> When it is not obvious which condition (drained or undrained) governs overall stability in any particular geotechnical unit, a calculation using a combination of drained or undrained conditions should be used in which the most unfavourable combination of drainage conditions is chosen.

(3) <RCM> The weight density of a specific soil layer should be represented either by a superior (upper) or inferior (lower) value, depending upon whether the weight of that layer has a favourable or unfavourable influence on the stability of the slope.

(4) <PER> The stabilizing effect from capillary tension may be used if its effect can be verified by comparable experience, groundwater pressure measurements or by long-term site observations under the different weather conditions that can occur during the service life of the earth-structure.

NOTE 3. The stabilizing effect is also referred to as apparent cohesion and can be significantly reduced with an increase or decrease in moisture content.

4.5.3.4 Stability of slopes and cuttings in rock mass

<These sub-clauses for rock mass are taken from Section 11 (overall stability) of the old EN 1997. PT6 to determine which to keep or change>

(1) <REQ> The stability of slopes and cuts in rock masses shall be checked against translational and rotational modes of failure involving isolated rock blocks or large portions of the rock mass, and also against rock falls. Particular attention shall be given to the pressure caused by blocked seepage water in joints and fissures. <From EN 1997-1 11.5.2 (1)>

(2) <REQ> Stability analyses shall be based on reliable knowledge of the pattern of discontinuities intersecting the rock mass and of the shear strength of the intact rock and of the discontinuities. <From EN 1997-1 11.5.2 (2)>

(3) <RCM> Account should be taken of the fact that failure of slopes and cuts in hard rock masses, with a well-defined pattern of discontinuities, will generally involve:

- sliding of blocks or rock wedges;
- toppling of blocks or slabs;
- a combination of toppling and sliding;

depending on the orientation of the slope face in relation to that of the discontinuities. <EN 1997-1 11.5.2>

(4) <RCM> It should be considered that failure of slopes and cuts in highly fissured rock masses and in soft rocks and cemented soils can develop along circular or almost circular slip surfaces passing through portions of intact rock. <From EN 1997-1 11.5.2 (4)>

(5) <RCM> Sliding of isolated blocks and wedges should usually be prevented by reducing the inclination of the slope by providing berms, and installing anchors, bolts and internal drainage. In cutting slopes, sliding should be prevented by selecting the direction and orientation of the slope face so that movements of isolated blocks are kinematically impossible. <From EN 1997-1 11.5.2 (5)>

(6) <RCM> To prevent toppling failures, anchoring or bolting and internal drainage should normally be applied. <From EN 1997-1 11.5.2 (6)>

(7) <RCM> When considering the long-term stability of slopes and cuts, the detrimental effects of vegetation and environmental or polluting agents on the shear strength of discontinuities and on the strength of the intact rock should be taken into account. <From EN 1997-1 11.5.2 (7)>

(8) <RCM> In highly fractured rock masses in steep slopes and slopes susceptible to toppling, spalling, ravelling and slumping, the possibility of rock falls should always be analysed. <From EN 1997-1 11.5.2 (8)>

(9) <RCM> In cases where reliable provisions to prevent rock falls are not feasible, rock falls should be allowed to occur with the provision of nets, barriers or other suitable provision to trap the falling rock. <From EN 1997-1 11.5.2 (9)>

(10) <RCM> The design of provisions to trap rock blocks and debris falling down a rock slope should be based on a thorough investigation of the possible trajectories of the falling material. <From EN1997-1 11.5.2 (10)>

4.5.3.5 Local stability

(1) <REQ> The influence of rock wedges within slopes and cuttings on the local stability shall be considered.

(2) <REQ> Local instability of sloping ground within the zone of influence of structures and foundations shall be considered.

(3) <REQ> The effect of possible local instability on the overall stability shall be considered.

4.5.4 Design assisted by testing

(1) <PER> Staged construction or trial embankments and excavations/cuttings may be used to obtain representative values of ground parameters.

(2) <RCM> The testing should be monitored according to 4.8.4 and 4.9.

4.5.5 Verification by prescriptive measures

(1) <PER> Embankments and cuttings in Geotechnical Category 1 may be designed by prescriptive measures if specified by the relevant authority or for a specific project with the relevant parties provided there is comparable local experience with structures of similar type, dimension, and ground conditions.

4.5.6 Verification by the Observational Method

(1) <REQ> The Observational Method shall be applied when it is not possible to prove solely by calculation, testing, or prescriptive measures that the occurrence of the limit states given in 4.2.4 are sufficiently unlikely.

(2) <PER> The design may be based on the Observational Method if any of the following conditions apply:

- the assumptions made in the calculations are based on limited or unreliable data;
- sloping ground with pre-existing failure surfaces;
- groundwater pressure development is of major importance to stability;
- deep cuttings where groundwater pressure conditions might only return to equilibrium slowly.

(3) <RCM> The Observational Method should only be used if there is no possibility of sudden, brittle failure and only if it is possible to monitor the earth-structure and its zone of influence.

4.6 Ultimate limit states

4.6.1 Verification of overall stability

(1) <REQ> The verification of all ultimate limit states affecting slopes, cuttings, and embankments shall be carried out in accordance with 4.5 by either calculation, testing, prescriptive methods, or the Observational Method.

(2) <RCM> The overall stability of the following geotechnical structures should be verified:

- ground retaining structures;
- cuttings and embankments, including reinforced and improved soil structures;
- structures, infrastructure and foundations on or near sloping ground.

(3) <REQ> Ultimate limit states caused by internal erosion or hydraulic pressure shall be verified according to EN 1997-1, 8.2.4.

(4) <REQ> The verification of overall stability shall be based on both drained and undrained conditions or a combination of both, as appropriate.

4.6.2 Bearing resistance of embankments

(1) <REQ> Resistance to punching failure of embankments on a stronger soil formation overlying a weaker formation shall be verified according to Clause 5.

4.6.3 Stability of improved ground

(1) <REQ> The verification of limit states for structures founded in or on improved ground shall conform to Clause 10.

4.6.4 Stability of reinforced ground structures

(1) <REQ> The verification of limit states for reinforced ground structures shall conform to Clause 9.

(2) <REQ> The design of anchors for slope stability shall conform to Clause 8.

(3) <REQ> The bearing resistance of the ground beneath reinforced embankments shall be verified according to Clause 5.

4.6.5 Structural design of stabilising measures

(1) <REQ> In cases where a combined failure of structural members and the ground could occur, ground-structure interaction shall be considered allowing for the difference in the stiffness of the ground and that of the structure.

NOTE 4. Such cases include failure surfaces intersecting structural members such as piles, anchors, and walls.

(2) <REQ> If structural members are used in the design to increase the overall stability, the structural reliability shall be verified for the combined effects of action from the ground and the super-structure for all relevant design situations.

(3) <RCM> Structural members used to improve the overall stability, bearing capacity or settlement performance shall be verified in accordance with Clause 6 for piled foundations, Clause 7 for retaining structures, Clause 8 for anchors, Clause 9 for reinforced ground structures, or Clause 10 for ground improvement.

4.6.6 Excessive deformation

(1) <RCM> When verifying ultimate limit states caused by large or excessive deformations, the design actions should conform to EN 1990, 8.3.1(2).

NOTE 5. The deformation Ed in Formula 8.2 of EN 1990 represents the axial deformation, transverse deformation, or overall deformation of the structure (as appropriate).

4.6.7 Partial factors

(1) <RCM> The stability of slopes, cuttings, and embankments should be verified using the material factor approach, with:

- factors γ_F applied to actions according to Formula (8.4) of EN 1990; and
- factors γ_M applied to ground properties according to Formula (8.12)

NOTE 6. Values of the partial factors are given in Table 4.2 (NDP) for persistent and transient design situations and in Table 4.3 (NDP) for accidental design situations, unless the National Annex gives different values.

(2) <RCM> The design values of material properties should be determined according to EN 1997-1, 4.4.3, and this clause.

(3) <RCM> The design value of the angle of internal friction of soil ($\varphi_{cv,d}$) under constant-volume conditions should be calculated from Formula (4.1):

$$\tan \varphi_{cv,d} = \frac{\tan \varphi_{cv,rep}}{\gamma_{\tan\varphi,cv}} \tag{4.1}$$

where:

$\varphi_{cv,rep}$ is the representative value of the angle of internal friction of soil under constant-volume conditions;

$\gamma_{tan\varphi,cv}$ is a partial material factor applied to the coefficient of internal friction of soil under constant-volume conditions.

(4) <RCM> The design value of the effective cohesion of soil (c'_d) under constant-volume conditions shall be taken as zero.

(5) <PER> Calculation of the overall stability of ground of fine soil of high plasticity, with existing slip surfaces or slopes with risk of progressive failure, may be undertaken using the residual angle of resistance.

(6) <RCM> The design value of the angle of internal friction of the ground (φ_d) based on the residual friction angle should be calculated with a partial factor $\gamma_{tan\varphi,res}$ and effective cohesion set to zero.

(7) <RCM> The design value of the angle of friction of soil along a residual slip surface ($\varphi_{res,d}$) should be calculated from Formula (4.2):

$$\tan \varphi_{res,d} = \frac{\tan \varphi_{res,rep}}{\gamma_{tan\varphi,res}} \tag{4.2}$$

where:

$\varphi_{res,rep}$ is the representative value of the angle of friction of soil along a residual slip surface;

$\gamma_{tan\varphi,res}$ is a partial material factor applied to the coefficient of internal friction of soil along a residual slip surface.

(8) <PER> Provided the conditions specified in EN 1997-1 4.4.3(10) are satisfied, the value of γ_M for transient design situations may be multiplied by a factor $K_{M,tr} \leq 1{,}0$ provided that the product $K_{M,tr} \cdot \gamma_M$ is not in itself less than 1,0.

NOTE 7. The value of KM,tr is 1.0 unless the National Annex gives a different value.

Table 4.2 (NDP) – Partial factors for the verification of ground resistance of slopes, cuttings, and embankments for fundamental (persistent and transient) design situations

Verification of	Partial factor on	Symbol	Material factor approach (MFA)[1, 2]
Overall stability	Actions and effects-of-actions	γ_F and γ_E	DC3
	Ground properties (other than those given below)	γ_M	M3[3]
	Coefficient of internal friction under constant-volume conditions	$\gamma_{\tan\varphi,cv}$	1,1 K_M
	Coefficient of friction along a residual slip surface	$\gamma_{\tan\varphi,res}$	1,1 K_M
Bearing resistance	see Clause 5		

[1]Values of the partial factors for Design Case 3 (DC3) are given in EN 1990 Annex A.
[2]Values of the partial factors for Set M3 are given in EN 1997-1 Annex A.
[3]Also includes ground properties of diffused ground improvement.

Table 4.3 (NDP) – Partial factors for the verification of ground resistance of slopes and embankments for accidental design situations

Verification of	Partial factor on	Symbol	Material factor approach (MFA)[1]
Overall stability	Actions and effects-of-actions	γ_F and γ_E	Not factored
	Ground properties (other than those given below)	γ_M	M3[2]
	Coefficient of internal friction under constant-volume conditions	$\gamma_{\tan\varphi,c}$	max(1,0K_M; 1.0)
	Coefficient of friction along a residual slip surface	$\gamma_{\tan\varphi,res}$	max(1,0K_M; 1.0)
Bearing resistance	see Clause 5		

[1]Values of the partial factors for Set M3 are given in EN 1997-1 Annex A.
[2]Also includes ground properties of diffused ground improvement.

<PT6 to add partial factors for rock in table 4.3 and 4.4 or in separate tables>

4.7 Serviceability limit states

4.7.1 General

(1) <REQ> Serviceability limit states for slopes, cuttings, and embankments shall be verified in accordance with EN 1990, 8.4.

(2) <REQ> It shall be verified that deformation of the ground within the zone of influence of a slope, cutting, or embankment will not cause a serviceability limit state in nearby structures or infrastructure.

(3) <REQ> Serviceability behaviour of cuttings, earth-structures and embankments shall be determined by calculation, testing, prescriptive measures, or the Observational Method.

(4) <RCM> Subsidence of the ground due to the following causes should be considered:

- change in groundwater conditions and corresponding groundwater pressures;
- ongoing creep;
- volume loss of soluble strata or due to internal erosion;
- shrinkage of soil due to change in water content.

(5) <RCM> Ground heave due to the following causes should be considered:

- frost action;
- swelling of soil due to change in water content;
- stress relief and rebound due to excavation.

4.7.2 Displacement of slopes

(1) <PER> In accordance with EN 1990, 5.1(2), if there are no explicit serviceability criteria, then the verification of serviceability limit states of slopes may be omitted provided ultimate limit states are verified.

(2) <PER> For slopes in Geotechnical Categories 1 and 2, an explicit displacement calculation may be omitted provided the maximum mobilized shear stress is less than 60 % of the representative ultimate shear resistance in the slope.

4.7.3 Settlement of embankments

(1) <RCM> Immediate settlement and settlement during execution should be included in the calculation of total settlement.

(2) <RCM> Delayed settlement within and below the embankment after construction due to self-weight or delayed compaction effects, consolidation, or creep should be included in the calculation of total settlement.

(3) <RCM> The following three components of settlement should be considered for partially- or fully-saturated soils in the ground and within the embankment fill:

- immediate settlement (s_0);

- settlement caused by consolidation (s_1);
- settlement caused by creep (s_2).

NOTE 1. Immediate settlement in fully-saturated soils is caused by shear deformation at constant volume; in partially-saturated soils it is additionally caused by volume reduction.

NOTE 8. Consolidation and creep can occur simultaneously, particularly in thick layers of soil of low permeability.

<Proposed to move these clauses to Part 1>

(4) <RCM> Potential differential settlement caused by the variability of the ground should be considered, unless this can be verified to be mitigated by the stiffness of any super-structure.

(5) <RCM> When verifying the settlement of an embankment, any decrease in effective stress in the ground due to submergence should be considered.

4.7.4 Structural serviceability

(1) <REQ> Selection of limiting values of ground movement that affects the serviceability of a structure shall conform to EN 1997-1, 9.3.

4.8 Execution

4.8.1 General

(1) <REQ> The execution of cuttings and embankments shall conform to EN 1997-1, 10, and EN 16907-1 and-3.

4.8.2 Supervision of design implementation during execution

(1) <REQ> Supervision of design implementation of cuttings and embankments during execution shall be undertaken in accordance with EN 1997-1, 10.2.

4.8.3 Inspection and control of execution

(1) <REQ> Inspection and control shall conform to EN 1997-1, 10.3, and be undertaken to ensure that the execution is carried out according to the design.

(2) <REQ> The quality control of earthworks shall conform to EN 16907-5.

(3) <RCM> An Inspection Plan should be prepared before execution including control or verification of:

- the ground and groundwater conditions;
- any adjacent displacement of sensitive structures;
- the sequence of works.

(4) <REQ> If the ground or groundwater conditions are found to be significantly worse than assumed in the Geotechnical Design Model, the design shall be revised accordingly.

(5) <REQ> If execution of the works invalidates the design assumptions, the design shall be revised accordingly.

4.8.4 Monitoring

4.8.4.1 General

(1) <REQ> Monitoring shall conform to EN 1997-1, 10.4, and EN 16907-1 and -5 and shall include the preparation of a Monitoring Plan.

(2) <RCM> Monitoring should cover the zone of influence and be applied in one or more of the following situations:

- when using the observational method (see EN 1997-1, 4.8);
- when design assisted by testing is used as a verification of limit states;
- where the stability to a large degree depends on the groundwater pressure distribution in and beneath the embankment;
- when utilizing the stabilising effect from capillary tension;
- where control of adverse effects on structures or utilities is required;
- where surface erosion is a considerable risk for the overall stability.

(3) <RCM> For slopes, cuttings, and embankments of Geotechnical Category 3, monitoring should be applied.

4.8.4.2 Monitoring of existing slopes and cuttings

(1) <REQ> A Monitoring Plan for existing slopes in the zone of influence of the construction works in Geotechnical Category 3 and for cuttings in Geotechnical Category 3 shall be prepared to cover both the execution and design service-life of the new structure.

(2) <RCM> A Monitoring Plan for slopes in the zone of influence of the construction works in Geotechnical Category 2 and for cuttings in Geotechnical Category 2 should be prepared to cover both the execution and design service-life of the new structure.

(3) <PER> The Monitoring Plan for an existing slope or cutting may include measurement of any of the following:

- groundwater levels or groundwater pressures, so that effective stress analyses can be carried out or checked;
- lateral and vertical ground displacements, in order to predict further deformations;
- the location of the moving surface in a developed slide, in order to derive the ground strength parameters for the design of remedial works;
- rates of ground displacement, in order to give warning of impending danger;
- visual observations giving indication of the occurrence of movement or changes in the groundwater level.;
- displacement of structures within the zone of influence.

4.8.4.3 Monitoring of embankments

(1) <RCM> A Monitoring Plan for embankments should be prepared according to EN 1997-1, 10.4 for Geotechnical Category 2 and 3.

(2) <PER> The Monitoring Plan for an embankment may include measurement of any of the following:

- groundwater pressure measurements during execution of embankments on fine soil of high compressibility;
- settlement measurements for the whole or parts of the embankment and influenced structures, roads, and services;
- measurements of horizontal displacements;
- checks on strength parameters of fill material during construction;
- chemical analyses before, during and after construction, if pollution control is required;
- checks on hydraulic conductivity or grain sized distribution of fill material and of foundation soil during construction.

(4) <RCM> When an embankment on fine soil of low strength is raised in layers, groundwater pressures should be monitored to ensure that they have dissipated to a sufficient degree to prevent a limit state being exceeded, before the next layer is placed.

4.8.5 Maintenance

(1) <REQ> A Maintenance Plan conforming to EN 1997-1, 10.5, shall be prepared for slopes, cuttings, and embankments in Geotechnical Categories 2 and 3.

(2) <PER> The Maintenance Plan may include any of the following:

- inspection and maintenance measures of erosion protection, drainage systems and filters;
- allowable dredging or excavation levels;
- procedures for canal or reservoir emptying;
- reconstruction or remedial measures of existing slopes after failure or extensive deformation;
- allowable loads and other restrictions during maintenance work.

4.9 Testing

(1) <PER> Testing required for verification of ground parameters or performance of the structure may be carried out, provided relevant measurements and monitoring are recorded during the testing.

(2) <REQ> Testing for quality control shall conform to EN 16907-5.

4.10 Reporting

4.10.1 Ground Investigation Report

(1) <REQ> The Ground Investigation Report shall conform to EN 1997-1, 12.2.

4.10.2 Geotechnical Design Report

(1) <REQ> The Geotechnical Design Report shall conform to EN 1997-1, 12.3.

(2) <RCM> For cuttings and embankments constructed in different phases, the analysis should be done phase by phase and provisions specified accordingly in the Geotechnical Design Report.

(3) <REQ> In cases where a supervision and monitoring programme is required, the designer shall present this in the Geotechnical Design Report. It shall be specified that the monitoring records are to be evaluated and acted upon where necessary.

(4) <RCM> The maximum allowed deviation Δa of geometrical parameters should be specified in the GDR.

NOTE 9. Δa can include surface or stratum levels, inclination of slopes and inclination of stratum or layers.

4.10.3 Geotechnical Construction Record

(1) <REQ> The Geotechnical Construction Record shall conform to EN 1997-1, 12.4.

(2) <RCM>Earthworks should be documented according to EN 16907.

4.10.4 Geotechnical test reports

(1) <REQ> Geotechnical test reports shall conform to EN 1997-1, 12.5.

5 Spread foundations

5.1 Scope

(1) <REQ> This clause shall apply to the design of spread foundations, including pad, strip, and raft foundations.

(2) <REQ> This clause shall also apply to the design of working platforms and unreinforced load transfer platforms.

(3) <PER> This clause may be applied to the design of deep foundations, including caissons, that behave as spread foundations.

5.2 Basis of design

5.2.1 Design situations

(1) <REQ> Design situations shall conform to EN 1997-1, 4.2.2.

(2) <REQ> Design situations for spread foundations shall include:

- applied axial and transverse forces, bending moment or shear forces in any combination;
- static, cyclic, dynamic or impact loads;
- accidental or seismic actions;
- loading due to lateral or vertical ground displacements;
- the potential impact of spread foundations on nearby structures;
- the effects of the particular features of rock.

NOTE 1. Features that can affect the design of spread foundations on rock are given in Annex B.3(2).

5.2.2 Geometrical data

5.2.2.1 General

(1) <REQ> Values of geometrical data for spread foundations shall be determined according to EN 1997-1, 4.4.4.

(2) <RCM> The width of a spread foundation should be chosen taking into account setting out tolerances, working space requirements, and the dimensions of the structural member supported by the foundation.

(3) <REQ> When choosing the depth of a spread foundation, influences that could affect the resistance of the bearing stratum shall be taken into account.

NOTE 1. Influences that can affect the resistance of the bearing stratum are given in Annex B.3(1).

(4) <REQ> The Geotechnical Design Model shall extend to a sufficient depth and width to include all the surrounding ground within the zone of influence that could affect either the resistance or the deformation behaviour of the spread foundation.

(5) <RCM> In homogeneous ground or where the ground properties increase with depth, the minimum depth of the zone of influence should be determined as the larger of:

- the depth at which the increase in vertical effective stress due to the applied load is 20% of the applied load; and
- the depth at which the increase in vertical effective stress due to the applied load is 20% of the initial in situ vertical effective stress, $\sigma'_{v,init}$ as shown in Figure 5.1, i.e. $\Delta\sigma'_v = 0.2 \cdot \sigma'_{v,init}$.

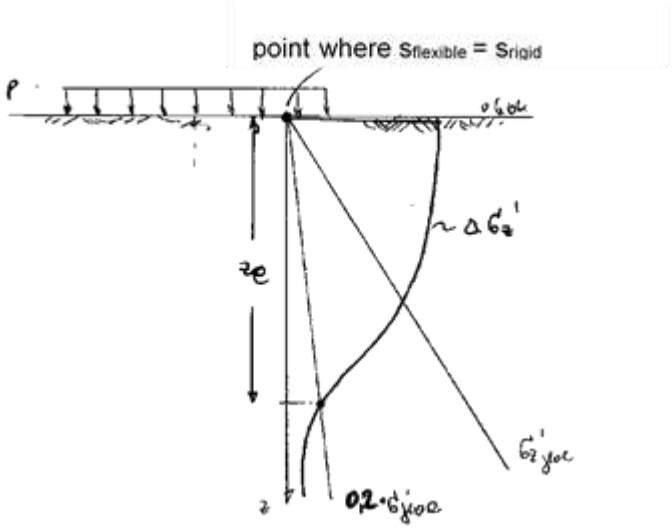

Figure 5.1 – Depth of influence zone given by depth at which increase in vertical effective stress due to the applied load, $\Delta\sigma'_v$ is 20% of the initial in situ vertical effective stress, $\sigma'_{v,init}$

(6) <RCM> Greater depths of influence than those given in (5) should be used if:

- the spread foundation is close to a slope; or
- the ground becomes softer beneath the depth determined by (5), or
- the interaction of closely spaced foundations results in increased vertical stress at depth in the ground.

(7) <RCM> In normally and slightly over-consolidated soil the zone of influence should stretch to the bottom of this layer.

5.2.2.2 Ground surfaces

(1) <REQ> The potential adverse influence of sloping ground shall be taken into account.

5.2.2.3 Water levels

(1) <REQ> Standing water, groundwater and piezometric levels shall be determined according to EN 1997-1, 6.2.

(2) <RCM> Where the groundwater level is close to the foundation level, the effects of capillary rise causing deterioration of foundation materials should be taken into account.

NOTE 1. Capillary rise can be avoided by including waterproofing membranes and a capillary break soil layer.

5.2.3 Actions and environmental influences

5.2.3.1 General

(1) <REQ> In addition to that specified in EN 1997-1, 4.3.1, the following actions and environmental influences, where present, shall be included in design situations involving spread foundations:

- imposed actions from the super-structure;
- the self-weight of the foundation;
- the weight of any backfill placed on the foundation;
- favourable and unfavourable earth pressures acting on the side of deep foundations;
- actions due to frost, including frost heave, thaw settlement, and thaw weakening of the ground;
- actions due to the swelling of active clays;
- actions on nearby structures due to the construction of a spread foundation.

(2) <RCM> The adverse effects of actions on a spread foundation due to future construction of neighbouring structures or nearby excavations should be taken into account.

(3) <REQ> Water pressures not caused by the foundation load shall be included as actions.

(4) <RCM> For spread foundations in Geotechnical Category 3, an analysis of the interaction between the superstructure and the ground should be performed in order to determine the actions.

5.2.3.2 Dynamic and cyclic loading

(1) <RCM> Actions due to loading from cranes, machinery, traffic and other sources that are applied repeatedly or vary in intensity should be identified for special design measures, in accordance with EN 1990, A.5.5.3, and EN 1997-1, 4.3.1.4(4).

<Drafting NOTE>Guidance on dynamic and cyclic loading to be added including guidance on ratio of proportion of non-monotonic to monotonic loading>

(2) <RCM> The design of foundations subject to dynamic and cyclic loading should take into account the following:

- occurrence of vibrations that can affect the structure, surrounding structures, people or sensitive machinery;
- degradation of ground strength and potential liquefaction of foundation soil (leading to ultimate limit states being exceeded at loads below those expected from verifications based on static strength);
- degradation of ground stiffness, leading to an accumulation of permanent foundation displacement; and
- amplification of loads or movements owing to resonance.

5.2.3.3 Actions due to frost

(1) <REQ> Measures shall be taken to avoid frost impact on soils and rocks during execution in frost susceptible soils and rocks.

(2) <PER> The occurrence of structural damage due to frost in the case of frost susceptible soils may be prevented by adopting one of the following measures:

- setting the foundation level beneath the depth of frost penetration;
- providing insulation to prevent frost occurring in accordance with ISO EN 13793.

(3) <REQ> The potential of ground freezing due to low temperatures passing through foundation elements causing deformations of the structure shall be taken into account in the case of frost susceptible soils and rocks.

NOTE 1. This particularly applies to thin raft foundations, including during execution.

NOTE 2. Ground freezing also can be caused by refrigerated buildings.

(4) <PER> The adverse effects of frost action caused by climatic conditions may be ignored below the depth of frost penetration.

(5) <REQ> The adverse effects of frost action caused by construction work or by refrigeration should be taken into account at all depths.

5.2.4 Limit states

(1) <REQ> In addition to the limit states specified in EN 1997-1, 8.2, the following ultimate limit states shall be verified for all types of spread foundation:

- structural failure due to foundation movement;
- excessive heave due to swelling, frost, or other causes.

(2) <RCM> Ultimate limit states other than those given in (1) should be verified as necessary.

(3) <REQ> In addition to the limit states specified in EN 1997-1, 9.1-9.3, the following serviceability limit states shall be verified for all types of spread foundation:

- settlement;
- heave;
- rotation and tilt;
- horizontal displacement.

(4) <RCM> Serviceability limit states other than those given in (3) should be verified as necessary.

5.2.5 Robustness

(1) <RCM> Spread foundations should be designed to accommodate any volumetric changes in fine soils that might be caused by the presence or removal of nearby trees or other vegetation.

(2) <RCM> If ponding of water above a spread foundation reduces its reliability against the occurrence of a limit state below an acceptable level, drainage systems should be provided to remove the surface water or structural measures implemented to prevent ponding.

(3) <RCM> Where the safety and serviceability of a spread foundation depend on the successful performance of a drainage system, one or more of the following measures should be taken:

- a maintenance programme should be specified;
- a drainage system should be specified that will perform adequately without maintenance; or

– a secondary ("backup") system should be specified that will prevent any potential leakage from entering the ground beneath or next to the structure.

NOTE 1. An example of a secondary system is a pipe or channel that encloses the primary system.

5.2.6 Ground investigation

5.2.6.1 General

(1) <REQ> The minimum amount of ground investigation for spread foundations shall conform to EN 1997-1, 4.1.9.2, and EN 1997-2, depending on the Geotechnical Category.

(2) <REQ> The minimum number of ground profiles and their maximum plan spacing shall conform to EN 1997-2.

(3) <REQ> The depth of ground investigation for spread foundations shall conform to to EN 1997-1, 4.1.9.2, according to the Geotechnical Category.

(4) <PER> Ground investigation for spread foundations in Geotechnical Category 1 may consist of a desk study and site inspection alone, provided the ground conditions are already known from comparable experience to be straightforward and the risk of overall instability or unacceptable ground movements is acceptably small.

5.2.6.2 Minimum depth of investigation

(1) <RCM> The depth of the ground investigation should be sufficient to determine the ground conditions within the zone of influence of the structure according to 5.2.2.1(5) and (6).

(2) <RCM> For low-rise buildings in Geotechnical Category 1, the minimum depth of investigation below the planned base of a spread foundation z_a should be 2 m.

(3) <RCM> For low-rise buildings in Geotechnical Category 2, the minimum depth of investigation below the planned base of a spread foundation z_a should conform to Formula (5.1):

$$z_a \geq \max(3b_F; 3m) \tag{5.1}$$

where:

b_F is the smaller side length of the foundation (on plan) – see Figure 5.2a.

(4) <RCM> For high-rise structures and industrial structures, the minimum depth of investigation below the planned base of a spread foundation z_a should conform to Formula (5.2):

$$z_a \geq \max(3b_F; 6m) \tag{5.2}$$

where:

b_F is the is the smaller side length of the foundation (on plan) – see Figure 5.2a.

(5) <RCM> Greater investigation depths should be selected when:

- unfavourable geological conditions, such as weak or compressible strata below strata of higher bearing resistance, are presumed;
- unstable ground conditions are anticipated;
- the project involves raising or lowering the ground level;
- unfavourable groundwater conditions are anticipated.

(6) <RCM> For raft foundations and structures with several foundation elements whose effects in deeper strata are superimposed on each other, the minimum depth of investigation below the planned base of the foundation z_a should be determined based on the expected zone of influence.

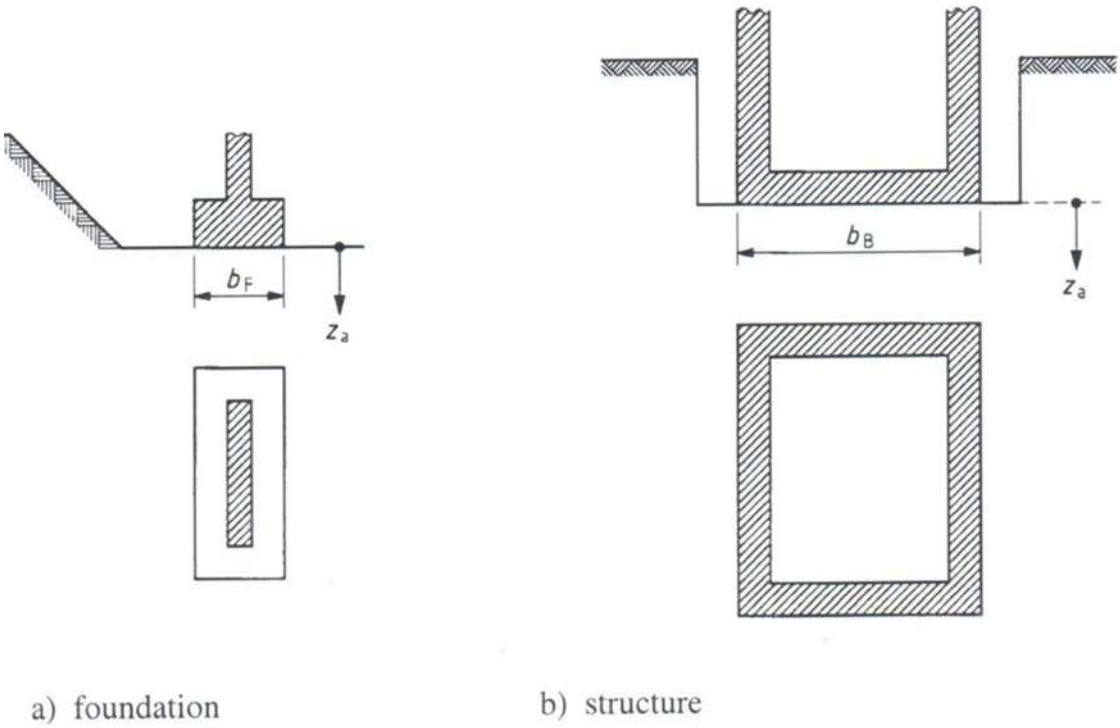

Figure 5.2 – Definition of z_a for spread foundations

5.2.7 Geotechnical reliability

(1) <RCM> Features in addition to those given in EN 1997-1, 4.1.2.3, should be taken into account when selecting the Geotechnical Complexity Class for spread foundations.

NOTE 1. Features that might cause complexity are given in Table 5.1 (NDP), unless the National Annex gives different features.

Table 5.1 (NDP) Selection of Geotechnical Complexity Class for spread foundations

Geotechnical Complexity Class	Complexity	Examples of general features causing uncertainty
GCC 3	Higher	Considerable uncertainty regarding any of the following: • ground with weak[a] layers • ground with persistent movement • areas of probably site instability Further examples with high[a] complexity: • structures with high[a] concentrated loads • foundations with relevant non-monotonic loading • foundations for tower structures like chimneys, pylons etc. • extended raft foundations on variable ground • spread foundations with significantly different foundation levels • spread foundations subject to significant dynamic, cyclic, or seismic loading that might affect the structure
GCC 2	Normal	GCC2 should be selected if GCC1 and GCC3 are not applicable. Some of the following could apply: • frost heave • uplift or settlement due to presence or removal of nearby trees • potential erosion
GCC 1	Lower	Negligible risk of the occurrence of an ultimate or serviceability limit state The following conditions apply for spread foundations: • pad and strip foundations in combination with ground conditions which are simple and the properties of which are known from comparable experience • negligible[a] risk of ground movements • no excavation below the groundwater level or such excavation is straightforward[a]
[a]the terms 'weak', 'high', 'negligible', and 'straightforward' are relative to any comparable experience that exists for the particular design situation		

5.3 Materials

5.3.1 Ground properties

5.3.1.1 General

(1) <REQ> Ground properties shall be determined in accordance with EN 1997-1, 5.1, and EN 1997-2.

5.3.1.2 Soil and fill properties

(1) <PER> In accordance with EN 1997-1, 5.2.2(2), drained or undrained soil parameters may be used in the design of spread foundations, depending on the permeability of the ground and the duration of the loading.

(2) <RCM> The following non-exhaustive list of soil and fill properties and field measurements should be considered as input for calculation of overall stability, bearing and sliding resistance of spread foundations:

- undrained shear strength of fine soils;
- effective cohesion;
- internal friction angle (peak, constant volume, or residual);
- weight density (dry, saturated, moist);
- groundwater pressure (groundwater level in coarse soil);
- sensitivity of fine soils;
- Atterberg limits of fine soils.

(3) <RCM> The following non-exhaustive list of soil and fill parameters should be considered as input for calculation of settlement:

- Young's modulus and Poisson's ratio or oedometric modulus;
- pre-consolidation pressure in fine soils;
- weight density (dry, saturated, moist);
- water content;
- coefficient of volume compressibility;
- compression and swelling (expansion) indices;
- coefficient of consolidation;
- secondary compression index (creep).

5.3.1.3 Rock and rock mass properties

(1) <RCM> The following non-exhaustive list of rock and rock mass parameters should be considered as input for calculations of overall stability, bearing and sliding resistance of spread foundations on rock:

- uniaxial compression strength;
- joint spacing;
- <to be extended by PT6>

5.3.1.4 Properties of improved ground

(1) <RCM> In addition to those listed in 5.3.1, modified or additional parameters for improved ground should be as specified in Clause 10.

5.3.2 Plain and reinforced concrete

(1) <REQ> Concrete for spread foundations shall be specified in accordance with and conform to EN 1992-1-1 and EN 206.

(2) <REQ> Steel reinforcement for concrete spread foundations shall conform to EN 10080 and EN 1992-1-1.

(3) <REQ> Tolerances for concrete spread foundations shall conform to EN 13670.

(4) <REQ> Exposure classes for concrete shall conform to EN 206 and concrete cover requirements to EN 1992-1-1.

(5) <REQ> The nominal cover allowance for durability and deviation should be at least k_1 for concrete cast against ground prepared by blinding and k_2 for concrete cast directly against soil or fill.

NOTE 1. The values of k_1 and k_2 are 40 mm and 75 mm, respectively, unless the National Annex gives different values.

5.4 Groundwater

(1) <REQ> All effects of changes in the groundwater level and groundwater pressures which could influence the bearing resistance and settlement, shall be considered in the design of spread foundations.

(2) <PER> The effect of the groundwater level on the bearing resistance may be taken into account.

NOTE 1. Guidance is given in Annex B.4.c(2).

(3) <PER> Increased groundwater levels and pressures owing to burst pipes and other failures of engineered systems involving water around a foundation may be classified as accidental actions.

5.5 Geotechnical analysis

5.5.1 General

(1) <REQ> Spread foundation designs shall be verified using one or more of the following methods:

- a direct method such as calculation using an analytical, empirical, or numerical model; or
- an indirect method, using comparable experience and the results of field or laboratory tests, measurements, or observations; or
- a prescriptive measure, which could involve presumed bearing resistance; or
- testing, in which a spread foundation is loaded to verify the ground properties or its resistance; or
- the Observational Method.

(2) <REQ> If a direct calculation method is used to design a spread foundation, separate analyses shall be carried out for each limit state.

(3) <REQ> When checking ultimate limit states, the direct method shall model as closely as possible the failure mechanism that is anticipated.

(4) <REQ> When checking serviceability limit states, the direct method shall be based on a calculation of ground movement.

(5) <RCM> If an indirect method is used to design a spread foundation, the dimensions of the foundation should be chosen on the basis of serviceability limit state loads so as to satisfy the requirements of all relevant limit states.

(6) <RCM> The design bearing resistance of a spread foundation should only be determined from presumed bearing resistances if comparable experience is available.

(7) <RCM> When checking a spread foundation for ultimate or serviceability limit states, the interaction effect of adjacent foundations on the loading, resistance and movement of the foundation should be

taken into account as well as the effect of the spread foundation on nearby foundations, structures, and services.

5.5.2 Verification by calculation

5.5.2.1 General

(1) <PER> The calculation models given in 5.5.2.2 and 5.5.2.3 may be used to verify limit states for spread foundations on soil or fill.

NOTE 1. Guidance is given in Annexes B.4 to B.12.

(2) <PER> The calculation models given in 5.5.2.4 may be used to verify limit states for spread foundations on rock.

NOTE 1. Guidance is given in Annex B.14.

(3) <RCM> Calculation models used to verify the bearing resistance of a spread foundation should account for the following:

- the strength of the ground;
- eccentricity and inclination of the loads;
- the shape, depth and inclination of the foundation;
- the inclination of the ground surface;
- groundwater pressures, groundwater level and hydraulic gradients;
- the variability of the ground, especially layering.

5.5.2.2 Bearing resistance from soil parameters

(1) <PER> The undrained bearing resistance (R_{Nu}) to a load acting normal to its base of a spread foundation on soil or fill may be calculated from Formula (5.3):

$$R_{Nu} = A'\left(c_u N_{cu} b_{cu} d_{cu} g_{cu} i_{cu} s_{cu} + q + 0.5\gamma B' N_{\gamma u}\right) \quad (5.3)$$

where:

A'	is the effective plan area of the foundation;
B'	is the effective foundation width shown in Figure 5.3;
N_{cu}	is non-dimensional bearing resistance factor for undrained conditions;
$N_{\gamma u}$	is a non-dimensional bearing resistance factor for the influence of the soil weight density ($N_{\gamma u}$ is zero for undrained conditions except when the ground surface slopes downwards away from the foundation when it is negative)
c_u	is the soil's undrained shear strength (assuming that $\varphi_u = 0^o$)
q	is the overburden pressure applied to the ground outside the foundation;
b_{cu}, d_{cu}, g_{cu}, i_{cu}, and s_{cu},	are non-dimensional factors to account for the effects of base inclination, embedment depth, ground surface inclination, load inclination, and foundation shape.

NOTE 1. Equations for bcu, dcu,, gcu, icu, and scu are given in Annex B.4b.

(2) <RCM> The effective plan area of the foundation (A') should be calculated from Formula (5.4):

$$A' = B' \times L' = (B \quad 2e_B)(L \quad 2e_L) \tag{5.4}$$

where:

B' is the effective foundation width shown in Figure 5.3;

L' is the effective foundation length shown in Figure 5.3;

B is the actual foundation width shown in Figure 5.3;

L is the actual foundation length shown in Figure 5.3;

e_B is the eccentricity of the applied load in the direction of B;

e_L is the eccentricity of the applied load in the direction of L.

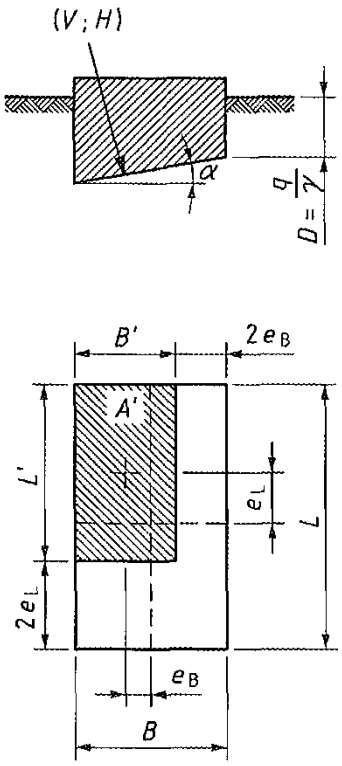

Figure 5.3 – Notation for a spread foundation with an inclined base and eccentric load

<Drafting NOTE: figure to be redrawn, V to be replaced by N, H to be replaced by T; ground to be shown sloping down at angle ω to the horizontal on one side>

(3) <PER> The drained bearing resistance (R_N) to a load acting normal to the base of a spread foundation on soil or fill may be calculated from Formula (5.5):

$$R_N = A'\left(c' N_c b_c d_c g_c i_c s_c + q' N_q b_q d_q g_q i_q s_q + 0.5\gamma' B' N_\gamma b_\gamma d_\gamma g_\gamma i_\gamma s_\gamma\right) \tag{5.5}$$

where:

A' is the effective plan area of the foundation;

B'	is the effective foundation width shown in Figure 5.3;
c'	is the soil's effective cohesion;
q'	is the effective overburden pressure in ground outside the foundation base at the level of the base;
γ'	is the effective weight density of the ground beneath the foundation;
N_c, N_q, N_γ	are non-dimensional bearing resistance factors;
b_c, b_g, b_γ	are non-dimensional factors accounting for base inclination;
d_c, d_g, d_γ	are non-dimensional factors accounting for the depth of foundation embedment;
g_c, g_g, g_γ	are non-dimensional factors accounting for ground surface inclination;
i_c, i_g, i_γ	are non-dimensional factors accounting for load inclination;
s_c, s_g, s_γ	are non-dimensional factors accounting for foundation base shape.

NOTE 1. Formulae for N_c, N_q, etc. are provided in Annex B.4c.

(4) <RCM> Formulae (5.3) and (5.5) should only be used when the ground is homogeneous or in layered ground where the properties do not differ by more than 5% between the layers in the zone of influence for bearing resistance failure.

(5) <PER> When calculating the bearing resistance of a foundation on layered ground where the properties of which do not differ by more than 5% between the layers, weighted average values of soil parameters within the zone of influence of the foundation may be used.

(6) <RCM> A value of $d_{cu} > 1.0$ in Formula (5.3) or $d_c > 1.0$ in Formula (5.5) should only be used when the strength of the soil above the foundation depth D is equal to or greater than the strength of the soil at foundation level.

(7) <REQ> Where the ground beneath a spread foundation has a definite structural pattern of layering or other discontinuities, the assumed rupture mechanism and the selected shear strength and deformation parameters shall take into account the characteristics of the layering and discontinuities.

(8) <RCM> Where a weak formation underlies a stronger formation, including a granular layer forming a working platform foundation, the rupture mechanisms that should be taken into account depend on the relative thickness of the stronger layer to the foundation width and should include:

- bearing resistance failure in the upper layer,
- punching failure through the upper layer and bearing resistance failure in the lower layer.

NOTE 1. Calculation models for the bearing resistance of spread foundations on a stronger layer over a softer layer are given in Annex B.5.

(9) <RCM> When analytical methods cannot accommodate or do not adequately represent the design situations described in (7) and (8), numerical procedures should be used instead to determine the most unfavourable failure mechanism.

5.5.2.3 Foundation settlement from soil parameters

(1) <PER> The settlement of a spread foundation may be evaluated using soil parameters and the calculation models that are appropriate for the type of ground and based on comparable experience

NOTE 1. Calculation models for settlement are provided in Annexes B.7, B8, B9, B10 and B11.

(2) <REQ> The following components of settlement shall be taken into account when calculating the settlement of spread foundations:

- immediate settlement (s_0);
- settlement caused by consolidation (s_1);
- settlement caused by creep (s_2).

NOTE 1. Creep can occur simultaneously with consolidation and can be significant for low strength fine soils and very loose to loose coarse soils.

(3) <RCM> Only models for which there is comparable experience should be used for predicting settlements.

NOTE 1. The sample models for calculating settlements are given in Annexes B.7 to B.12 for situations where comparable experience exists.

(4) <REQ> The settlement of spread foundations on soils that are susceptible to creep, in which case settlement may continue for a significant proportion of the design life of the structure, shall be determined by appropriate analysis and designed appropriately.

(5) <RCM> The depth of the compressible soil layer to be taken into account when calculating settlement should depend on the load, the size and shape of the foundation, the variation in soil stiffness with depth and the spacing of foundation elements.

(6) <PER> A model that may be used to determine the depth of the compressible soil layer to be taken into account for settlement calculation is given in 5.2.2.1(5).

(7) <RCM> The following factors potentially causing additional settlement should be taken into account:

- the effect of change of effective stress due to lowering of groundwater (dewatering);
- any additional settlement caused by self-weight compaction of the soil;
- the effects of self-weight, flooding and vibration on fill and collapsible soils;
- the effects of stress changes on crushable sand.

(8) <REQ> The settlement of spread foundations shall be calculated assuming a distribution of bearing pressure corresponding to the deformation of the foundation and the ground.

(9) <RCM> Allowance should be made for differential settlement caused by variability of the ground unless it is prevented by the stiffness of the structure.

(10) <PER> The tilting of an eccentrically loaded foundation, which is of limited size and hence assumed to be rigid, may be estimated by assuming a linear bearing pressure distribution and then calculating the settlement at the corner points of the foundation, using the vertical stress distribution in the ground beneath each corner point and the settlement calculation models described above.

(11)<PER> An analysis of ground-structure interaction may be used to obtain a more detailed prediction of differential settlements.

NOTE 1. Differential settlement calculations that ignore the stiffness of the structure tend to be over-predictions.

5.5.2.4 Bearing resistance and settlement from semi-empirical models

(1) <PER> An empirical or semi-empirical model may be used to verify bearing resistance provided there is comparable experience of its successful use.

(2) <PER> The bearing resistance and settlement of a spread foundation on soil may be calculated from the results of Ménard Pressuremeter Tests and calculation models.

NOTE 1. Calculation models for the bearing resistance and settlement of a spread foundation based on the results of Menard Pressuremeter Tests are given in Annexes B.6 and B12.

5.5.2.5 Bearing resistance from rock parameters

(1) <PER> Calculation models may be used to verify limit states for spread foundations on rock.

<Further clauses to be added by PT6>

5.5.2.6 Sliding resistance

(1) <REQ> Where the loading is not normal to the foundation base, the sliding resistance of the foundation shall be verified.

(2) <RCM> Where a spread foundation is constructed on a lean concrete blinding layer or includes a waterproof membrane, failure occurring in another plane weaker than the plane between the foundation base and the underlying ground should be taken into account.

(3) <REQ> The sliding resistance R_T shall be determined by using an analytical, empirical or numerical model in accordance with EN 1997-1, 4.4 and 5.5.2.5.

(4) <REQ> The design sliding resistance of a spread foundation shall satisfy Formula (5.6):

$$T + T_a \leq R_T + R_p \qquad (5.6)$$

where:

T is the value of the applied action acting tangential to the foundation base;

T_a is the active force from ground adjacent to the foundation acting tangential to the foundation base;

R_T is the resistance of the spread foundation to sliding;

R_p is the passive resistance from ground adjacent to the foundation acting parallel to the foundation base.

(5) <REQ> T_a and R_p shall be calculated according to Clause 7.

(6) <REQ> T might be the resultant of actions in two directions, in which case they and the resulting resistance components shall be combined.

(7) <RCM> The value of R_T should be calculated taking account of the nature of the ground including any backfill within the lateral zone of influence.

(8) <RCM> The values of T_a, R_T and R_p should be related to the scale of movement anticipated under the limit state design loading.

(9) <RCM> For large movements, the potential relevance of post-peak behaviour for R_T should be taken into account.

(10)<REQ> For spread foundations that are founded within the zone of seasonal movements of fine soils, the possibility that the soil could shrink away from the vertical faces of foundations resulting in R_T not being available shall be taken into account.

(11)<REQ> The possibility that R_T may not be available as a result of the soil in front of the foundation being removed by erosion or human activity shall be taken into account.

(12)<PER> The undrained sliding resistance (R_{Tu}) of a spread foundation on its base on soil or fill may be calculated from Formula (5.7):

$$R_{Tu} = A' c_u \tag{5.7}$$

where:

A' is the effective plan area of the foundation as shown in Figure 5.3 and calculated in accordance with 5.5.2.2(2);

c_u is the soil's undrained shear strength.

(13)<PER> The drained sliding resistance (R_T) of a spread foundation on its base on soil or fill may be calculated from Formula (5.8):

$$R_T = N' \tan\delta \tag{5.8}$$

where:

N' is the effective load acting normal to the foundation base;

$\tan\delta$ is the coefficient of interface friction between the structure and the ground.

(14)<REQ> The value of the ground-structure interface coefficient ($\tan\delta$) shall satisfy Formula (5.9):

$$\tan\delta \leq k_\delta \cdot \tan\varphi \tag{5.9}$$

where:

tan φ is the value of the soil's coefficient of internal friction;

k_δ is a constant depending on the design situation

(15)<RCM> For spread foundations made of concrete cast directly against soil or fill, the value of k_δ should be taken as 1.0; otherwise, for pre-cast concrete or other materials, it should be taken as 2/3.

(16)<RCM> When verifying the sliding resistance of a spread foundation, the representative angle of internal friction of soil or fill should be taken as its constant-volume value φ'_{cv} to account for inevitable disturbance of the soil or fill beneath the foundation.

(17)<RCM> When designing a spread foundation against sliding using the Mohr-Coulomb model, the value of effective cohesion c' at the base of the foundation should be taken as zero.

5.5.3 Verification by prescriptive measures

(1) <PER> Presumed bearing resistances may be used to verify spread foundations in Geotechnical Categories 1 and 2 in design situations for which there is comparable experience.

NOTE 1. A method for determining the presumed bearing resistance of spread foundations on soil with settlements not exceeding 0.5% of the foundation width is given in Annex B.13.

NOTE 2. A method for determining the presumed bearing resistance of spread foundations on rock with settlements not exceeding 0.5% of the foundation width is given in Annex B.14.

(2) <RCM> For spread foundations on rock with open or infilled joints, reduced values of presumed bearing pressure should be used.

(3) <REQ> The presumed bearing resistance should not exceed the uniaxial compressive strength of the rock if joints are tight or 50 % of this value if joints are open,

(4) <REQ> For spread foundations on strong intact rock, the bearing resistance of the foundation shall be taken as the smaller of that of the intact rock and that of the concrete.

5.5.4 Verification by testing

(1) <PER> The results of large-scale tests may be used to verify limit states for a spread foundation directly.

(2) <REQ> The location of the test shall be chosen in accordance with the ground investigation results in order to be representative of the most unfavourable ground conditions likely to be found under the structure.

(3) <REQ> When evaluating the results of large scale foundation tests to verify limit states, any excess groundwater pressures beneath the foundation shall be measured and taken into account.

(4) <REQ> When using a test to verify states for a spread foundation, differences in scale and response between the test foundation and the real foundation shall be taken into account, including the adverse influence of weak layers within the zone of influence of the test.

5.5.5 Verification by the Observational Method

(1) <PER> The Observational Method may be used to verify the limit states of a spread foundation if any of the following conditions apply:

- it is not possible to verify by calculation, testing or prescriptive measures that the occurrence of the limit states referred to in 4.2.4 are sufficiently unlikely;
- the assumptions made in the calculations are not based on reliable data.

(2) <RCM> When using the Observational Method to verify limit states for a spread foundation, the verification should comply with EN 1997-1, 4.8.

5.6 Ultimate limit states

5.6.1 General

(1) <REQ>The ultimate limit states of a spread foundation involving overall stability, bearing, and sliding failure shall be verified using Formula (8.1) of EN 1990.

(2) <REQ> The design resistance of the ground beneath a spread foundation shall be verified for drained and undrained conditions (or a combination of both), depending on the prevailing drainage conditions.

5.6.2 Overall stability

(1) <REQ> Isolated spread foundations and groups of spread foundations shall be verified against the occurrence of an ultimate limit state of overall stability in accordance with Clause 4.

(2) <RCM> The overall stability of a spread foundation should be checked in the following design situations:

- on or near sloping ground;
- near an excavation or a cut;
- near a river, a canal, a lake, a reservoir or the sea shore;
- near mine workings or buried structures.

5.6.3 Bearing resistance and punching failure

5.6.3.1 General

(1) <REQ> The design bearing resistance R_d shall be determined either by using an analytical, empirical, or numerical model in accordance with EN 1997-1, 4.4, and 5.5.2.2, 5.5.2.3, or 5.5.2.4 or by using a prescriptive method in accordance with 5.5.3.

(2) The design bearing resistance R_{Nd} of a spread foundation shall satisfy Formula (5.10):

$$N_d \leq R_{Nd} \tag{5.10}$$

where

N_d is the design value of the component of the action acting normal to the foundation base;

R_{Nd} is the design value of the bearing resistance normal to the foundation base.

5.6.3.2 Empirical models

(1) <REQ> When designing a spread foundation from the results of Ménard Pressuremeter Tests, the resistance factor approach shall be used.

5.6.3.3 Prescriptive measures involving presumed bearing resistance

(1) <PER> Prescriptive measures based on presumed bearing resistance and serviceability limit state loading may be used to verify ultimate and serviceability limit states of spread foundations in Geotechnical Categories 1 and 2.

(2) <REQ> Presumed bearing resistances shall only be used if the following conditions apply:

- the ground surface is inclined at less than 5 degrees to the horizontal;
- the ground demonstrates adequate strength to twice the foundation width below the foundation base and to at least 2 m depth;
- the foundation is not regularly or primarily dynamically loaded;
- the inclination of the resultant representative action on the foundation base satisfies the condition given in Formula (5.11):

$$T_{rep} < 0{,}2N_{rep} \tag{5.11}$$

where:

T_{rep} is the representative value of the horizontal load or component of the action applied to the spread foundation acting parallel to the foundation base;

N_{rep} is the representative value of the vertical load or component of the action applied to the spread foundation acting normal to the foundation base.

(3) <RCM> The design bearing resistance of a spread foundation should only be determined from presumed bearing resistances if comparable experience is available.

5.6.4 Sliding resistance

(1) <REQ> When using the material factor approach, the design undrained shearing resistance R_{Tud} of a spread foundation against sliding shall be calculated using Formula (5.12):

$$R_{Tud} = \min\left(c_{ud}A'; N_{d,fav}\right) = \min\left(\frac{c_{u,rep}}{\gamma_{cu}}A'; \gamma_{N,fav}N_{rep,fav}\right) \tag{5.12}$$

where:

$c_{u,d}$ is the design value of soil's undrained shear strength;

$c_{u,rep}$ is the representative value of soil's undrained shear strength;

A' is the effective plan area of the spread foundation;

$N_{d,fav}$ is the minimum (favourable) design load acting normal to the foundation base;

$N_{rep,fav}$ is the minimum (favourable) representative load acting normal to the foundation base;

γ_{cu} is a partial material factor;

$\gamma_{N,fav}$ is a partial action factor.

NOTE 1. $\gamma_{N,fav}$ = 0.4 unless the National Annex gives a different value.

(2) <REQ> When using the resistance factor approach, the design undrained shearing resistance R_{Tud} of a spread foundation against sliding shall be calculated using Formula (5.13):

$$R_{Tud} = \min\left(\frac{c_{u,rep}A'}{\gamma_{RT}}; \gamma_{N,fav}N_{rep,fav}\right) \tag{5.13}$$

where, in addition to the parameters defined for (5.12):

γ_{RT} is a partial factor on sliding resistance.

(5) <PER> If it is impossible for water or air to reach the interface between the foundation and the surrounding ground or if the formation of a gap between the foundation and the surrounding ground will be prevented by suction in areas where there is no positive bearing pressure, then the second term $\gamma_{N,fav}N_{rep,fav}$ may be disregarded in (5.12) and (5.13).

(6) <REQ> When using the material factor approach, the design drained shearing resistance R_{Td} of a spread foundation against sliding shall be calculated using Formula (5.14):

$$R_{Td} = \left(N_{Gd,fav} \quad U_d\right)\tan\delta_d = \left(\gamma_{G,fav}N_{G,rep,fav} \quad \gamma_F U_{rep}\right)\times\left(\frac{\tan\delta_{rep}}{\gamma_{\tan\delta}}\right) \tag{5.14}$$

where:

$N_{Gd,fav}$ is the design value of the favourable permanent load acting normal to the foundation base;

$N_{G,rep,fav}$ is the representative value of the favourable permanent load acting normal to the foundation base;

U_d is the design value of the any uplift from groundwater pressures acting normal to the foundation base;

U_{rep} is the representative value of the any uplift from groundwater pressures acting normal to the foundation base;

δ_d is the design value of interface friction between the foundation and the ground;

δ_{rep} is the representative value of interface friction between the foundation and the ground;

$\gamma_{G,fav}$ is a partial factor applied to favourable permanent actions;

γ_F is a partial factor applied to unfavourable actions;

$\gamma_{\tan\delta}$ is a partial factor applied to the coefficient of interface friction.

(7) <REQ> When using the resistance factor approach, the design drained shearing resistance R_{Td} of a spread foundation against sliding shall be calculated using Formula (5.15):

$$R_{Td} = \frac{\left(N_{G,rep,fav} \quad U_{rep}\right) \cdot \tan \delta_{rep}}{\gamma_{RT}} \tag{5.15}$$

where:

$N_{G,rep,fav}$ is the representative value of the favourable permanent load acting normal to the foundation base;

U_d is the design value of the any uplift from groundwater pressures acting normal to the foundation base;

δ_{rep} is the representative value of interface friction between the foundation and the ground;

γ_{RT} is a partial factor on sliding resistance.

(3) <REQ> In determining $N_{Gd,fav}$ and $N_{G,rep,fav}$, account shall be taken of whether T and N are dependent or independent actions.

5.6.5 Rotational failure

(1) <REQ> The stability against rotational failure of spread foundations subject to loads with large eccentricities shall be verified by checking that the destabilizing design moments about the assumed point of rotation are less than or equal to the stabilizing design moments.

(2) <REQ> The design stabilising and destabilising moments shall be calculated using the DC1 partial factors.

(3) <RCM> The eccentricity of loading on a spread foundation should be limited to the values given in Table 5.2.

Table 5.2 Limits to the load eccentricity e in the case of ULS design

	Strip foundation	Circular foundation	Rectangular foundation
Fundamental (persistent and transient) situations	$e \leq \left(\frac{7}{15}\right) B$	$e \leq \left(\frac{37}{80}\right) D$	$e \leq \left(1 - 2\frac{e_B}{B}\right)\left(1 - 2\frac{e_L}{L}\right) \geq \frac{1}{15}$

(4) <REQ> The following precautions shall be taken where the eccentricity of loading exceeds 1/3 of the width of a rectangular foundation or 0.3 times the diameter of a circular foundation:

— careful review of the design values of the actions; and
— designing the location of the foundation edge by taking into account the magnitude of construction tolerances.

(5) <RCM> Unless specific measures are specified to control the dimensions of a cast-in-place concrete foundation, the design breadth of the foundation B_d should be calculated from Formula (5.16):

$$B_d = B_{nom} + \Delta B \tag{5.16}$$

where:

B_{nom} is the nominal breadth of the foundation;

ΔB is a deviation.

NOTE 1. The value of ΔB is 0.1 m, unless the National Annex gives a different value.

5.6.6 Structural failure due to large foundation movement

(1) <REQ> It shall be verified that foundation displacements do not cause an ultimate limit state to occur in the supported structure.

(2) <REQ> Ultimate limit states caused by large deformations of a spread foundation shall be verified according to EN 1990, 8.3.1(2).

(3) <PER> A prescriptive measure consisting of a presumed bearing resistance may be adopted (see 5.5.3) provided displacements will not cause an ultimate limit state in the structure.

(4) <REQ> In ground that may swell, the potential differential heave shall be assessed and the foundations and structure designed to resist or accommodate it.

5.6.7 Structural ULS design

(1) <PER> In the ultimate limit state structural design of a spread foundation, the bearing pressure beneath a rigid foundation may be assumed to be distributed linearly.

(2) <PER> A more detailed analysis of soil-structure interaction may be undertaken to justify a more economic structural design.

5.6.8 Partial factors

(1) <RCM> The ultimate resistance of a spread foundation should be verified using either:

- the material factor approach (MFA), with:
  - factors γ_F applied to actions according to Formula (8.4) of EN 1990; and
  - factors γ_M applied to ground properties according to Formula (8.12) of EN 1990;
- or the resistance factor approach (RFA), with:
  - factors γ_E applied to the actions according to Formula (8.4) of EN 1990 or to the effects-of-actions according to Formula (8.5) of EN 1990; and
  - factors γ_R applied to ground resistance, using Formula (8.13) of EN 1990.

NOTE 1. Unless the National Annex gives a specific choice, the approach to be used is as specified by the relevant authority or agreed for a specific project with the relevant parties.

NOTE 2. Values of the partial factors are given in Table 5.2 (NDP) for persistent and transient design situations and in Table 5.3 (NDP) for accidental design situations unless the National Annex gives different values.

Table 5.2 (NDP) – Partial factors for the verification of ground resistance of spread foundations for fundamental (persistent and transient) design situations

Verification of	Partial factor on	Symbol	Material factor approach (MFA)			Resistance factor approach (RFA)
			(a)	(b)	(c)	
Overall stability	See Clause 4					
Bearing and sliding resistance	Actions and effects-of-actions	γ_F and γ_E	DC1[1]	DC3[1]	DC1[1]	DC1[1]
	Ground properties	γ_M	M1[2]	M3[2]	M3[2]	Not factored
	Bearing resistance	γ_{Rv}	Not factored			1,4
	Sliding resistance	γ_{Rh}	Not factored			1,1
[1]Values of the partial factors for Design Cases (DCs) 1 and 3 are given in EN 1990 Annex A, Table A.1.8. [2]Values of the partial factors for Sets M1 and M3 are given in EN 1997-1 Annex A, Table A.1.8.						

Table 5.3 (NDP) – Partial factors for the verification of ground resistance of spread foundations for accidental design situations

Verification of	Partial factor on	Symbol	Material factor approach (MFA)			Resistance factor approach (RFA)
			(a)	(b)	(c)	
Overall stability	See Clause 4					
Bearing and sliding resistance	Actions and effects-of-actions	γ_F and γ_E	Not factored			
	Ground properties	γ_M	M1[1]	M3[1]	M3[1]	Not factored
	Bearing resistance	γ_{Rv}	Not factored			1,2
	Sliding resistance	γ_{Rh}	Not factored			[1,05]
[1]Values of the partial factors for Sets M1 and M3 are given in EN 1997-1 Annex A, Table A.1.8.						

(2) <REQ> If the material factor approach is used to verify ground resistance beneath a spread foundation, then both combinations (a) and (b) given in Table 5.2 (NDP) and Table 5.3 (NDP), as appropriate, shall be verified.

(3) <PER> Alternative to (2), the single combination (c) may be verified instead of (a) and (b).

(4) <PER> Provided the conditions specified in EN 1997-1 4.4.3(10) are satisfied, the value of γ_{Rv} and γ_{Rh} for transient design situations may be multiplied by a factor $K_{R,tr} \leq 1{,}0$ provided that the products $K_{R,tr}\,\gamma_{Rv}$ and $K_{R,tr}\,\gamma_{Rh}$ are not less than 1.0.

NOTE 1. For spread foundations, the value of $K_{R,tr}$ is 1.0 unless the National Annex gives a different value.

5.7 Serviceability limit states

5.7.1 General

(1) <REQ> Serviceability limit states for spread foundations shall be verified in accordance with EN 1990, 8.4.

(2) <REQ> The serviceability of strip and raft foundations shall be checked according to EN 1997-1, 9, assuming a distribution of bearing pressure corresponding to the deformation of the foundation and the ground.

(3) <REQ> The adverse effects of foundation displacements shall be taken into account both in terms of displacement of the entire foundation and differential displacements of parts of the foundation.

(4) <REQ> Account shall be taken of displacements caused by actions on the foundation, including the geotechnical actions listed in EN 1997-1, 4.3.1.4(1).

(5) <REQ> In assessing the magnitude of foundation displacements, account shall be taken of comparable experience, as defined in EN 1997-1, 3.1.1.17.

(6) <PER> A direct verification of a serviceability limit by a settlement calculation may be omitted in accordance with EN 1997-1, 9.1(4), for spread foundations in Geotechnical Category 1 on fine soils of at least medium strength, provided that the bearing pressure is limited to no more than 75 % of the preconsolidation pressure.

[Additional guidance for spread foundation on rock to be provided by PT6]

(7) <PER> For low-rise buildings on fine soils in Geotechnical Category 1, an explicit verification of serviceability by calculation of settlement may be omitted provided:

- the ratio of the foundation's representative bearing resistance (at the soil's initial undrained shear strength) to the representative applied load is greater than 3; and
- comparable experience is available.

(8) <RCM> Explicit verification of serviceability should be undertaken if the ratio calculated in (6) is less than 3; the verification should take account of non-linear stiffness effects in the ground if the ratio is less than 2.

(9) <REQ> The effect of neighbouring foundations and fills shall be taken into account, including the stress increase in the ground and its influence on ground compressibility.

5.7.2 Settlement

(1) <RCM> Upper and lower bound estimates of settlement should be determined using inferior and superior characteristic values of stiffness and hydraulic conductivity.

(2) <REQ> To ensure the avoidance of a serviceability limit state, assessment of differential settlements and relative rotations shall take account of both the distribution of loads and the possible variability of the ground.

(3) <PER> The settlement of a foundation on rock may be assessed on the basis of comparable experience related to rock mass classification.

5.7.3 Heave

(1) <REQ> When assessing heave for the verification of a serviceability limit state, calculation shall be based on heave due to the following potential mechanisms:

- reduction of effective stress;
- volume expansion of partly saturated soil;
- heave recovery due to death or removal of trees;
- longer term heave due to leaking water carrying utility services from damage initially caused by desiccation of the ground due tom the action of the tree;
- heave due to constant volume conditions in fully saturated soil, caused by settlement of an adjacent structure;
- heave due to chemical reactions in the ground.

NOTE 1. An example of a chemical reaction in the ground causing heave is the transformation of anhydrite (anhydrous calcium sulfate) to gypsum.

(2) <REQ> Calculations of heave shall include both immediate and delayed heave.

5.7.4 Tilting

(1) <REQ> For spread foundations subject to eccentric loading, it shall be verified that differential settlement of the foundation will not result in the occurrence of a serviceability limit state due to unacceptable tilting of the supported structure.

(2) <RCM> To avoid the occurrence of a serviceability limit state, the eccentricity of the loading on a spread foundation should be limited to the values given in Table 5.5.

Table 5.5 Limits to the load eccentricity in the case of SLS design

Design situation	**Strip foundation**	**Circular foundation**	**Rectangular foundation**
SLS	$e \leq \frac{D}{6}$	$e \leq \frac{D}{8}$	$e \leq \left(1 - 2\frac{e_B}{B}\right)\left(1 - 2\frac{e_L}{L}\right) \geq \frac{2}{3}$

5.7.5 Vibration

(1) <REQ> Foundations for structures subjected to vibrations or to vibrating loads shall be designed to ensure that vibrations will not cause excessive settlements or a loss of serviceability of supported or adjacent structures.

(2) <RCM> Precautions should be taken to ensure that resonance will not occur between the frequency of the dynamic load and a critical frequency in the foundation-ground system, and to ensure that liquefaction will not occur in the ground.

(3) <REQ> Accelerations and vibrations caused by earthquakes shall be taken into account according to EN 1998.

5.7.6 Structural SLS design

(1) <PER> In the structural design of a spread foundation for serviceability, the distribution of bearing pressure beneath a flexible foundation may be derived by modelling the foundation as a beam or raft resting on a deforming continuum or series of springs, with appropriate stiffness and strength, in order to assess the deformation of the structure determined by a settlement calculation.

(2) <PER> The relative stiffness K_s of a rectangular spread foundation may be determined assuming elastic behaviour for the foundation and the ground and Formula (5.17):

$$K_s = 5.57\left(\frac{E_f}{E_g}\right)\frac{(1 \quad \upsilon_g^2)}{(1 \quad \upsilon_f^2)}\left(\frac{B}{L}\right)^{0.5}\left(\frac{D_f}{L}\right)^{3} \tag{5.17}$$

where:

E_f is the Young's modulus of the foundation material;

E_g is the is the representative Young's modulus for the ground beneath the foundation (i.e. the value of Young's modulus at a depth equal to the radius of a circular footing or half the foundation width);

ν_g is Poisson's ratio of the ground;

ν_f is Poisson's ratio of the foundation material;

B is the foundation width;

L is the foundation length; and

D_f is the foundation depth (thickness).

NOTE 1. A foundation is assumed to be rigid when K_s is greater than 10 and flexible when K_s is less than 0,05. For K_s values between these values the relative deflection and the bending moments in the foundation are a function of K_s.

(3) <PER> In a spread foundation, bending moments and shear forces may be derived by modelling the foundation as a beam or raft resting on a deforming continuum or series of springs, with appropriate stiffness.

(4) <PER> When designing a spread foundation as a beam resting on a series of springs, the subgrade modulus k may be determined using Formula (5.18):

$$k = \frac{0.65E'}{B(1 \quad \upsilon^2)} \tag{5.18}$$

where:

E' is Young's modulus of the ground;

υ is Poisson's ratio of the ground; and

B is the foundation width.

NOTE 1. Calculations based on spring stiffness do not provide realistic estimations of deformations for serviceability limit state verification.

5.8 Execution

5.8.1 General

(1) <REQ> The execution of concrete spread foundations shall conform to EN 13670.

5.8.2 Supervision of design implementation during construction

(1) The supervision of design implementation of spread foundations shall conform to EN 1997-1, 10.2.

5.8.3 Inspection and control of execution

(1) <REQ> The inspection and control of the execution of spread foundations shall conform to EN 1997-1, 10.3.

(2) <REQ> The subsoil shall be prepared with great care. Roots, obstacles and enclosures of weak soil shall be removed without disturbing the ground. Any resulting holes shall be filled with soil (or other material) to replicate the stiffness of the undisturbed ground.

(3) <RCM> In soils susceptible to disturbance, the sequence of excavation for a spread foundation should be specified to minimize disturbance.

5.8.4 Monitoring

(1) <REQ> When monitoring is specified in the Geotechnical Design Report, it shall conform to EN 1997-1, 10.4.

5.8.5 Maintenance

(1) <REQ> When maintenance is specified in the Geotechnical Design Report, it shall conform to EN 1997-1, 10.5.

(2) <REQ> Drainage systems around spread foundations should be designed for ease of maintenance and renewal during the design life of the structure.

5.9 Testing

5.9.1 General

(1) <REQ> When testing is specified in the Geotechnical Design Report to verify the design, it shall be in accordance with EN 1997-1, 11.

(2) <REQ> Plate Loading Tests shall be executed and reported in accordance with EN ISO 22476-13 (not yet published).

(3) <RCM> The results of Plate Loading Tests should only be used to verify a design if:

- the size of the plate has been chosen considering the width of the planned spread foundation (in which case the observations are transformed directly);

– a homogeneous layer up to two times the width of the planned spread foundation exists (in which case the results of smaller sized plates – not considering the planned foundation width – are used to transform the results on an empirical basis to the actual foundation size).

NOTE 1. The depth of the zone tested by the PLT is limited to approximately twice the diameter of the plate. Therefore, no inference concerning the soil quality below that depth can be made unless additional investigation, e.g. sounding, is carried out.

(4) <PER> Based on established experience, the results of a Plate Loading Test may be used with an adjusted elasticity method 1 to determine the Young's modulus and evaluate the settlement of a spread foundation on soil and fill and on rock.

NOTE 1. An adjusted elasticity method is given in Annex B.7.

(5) <RCM> When a Plate Loading Test is used to determine the Young's modulus and evaluate the settlement of a spread foundation on soil and fill, the effects of any groundwater pressures generated on loading should be taken into account.

5.9.2 Investigation tests

<Clause not used>

5.9.3 Suitability tests

<Clause not used>

5.9.4 Acceptance tests

<Clause not used>

5.10 Reporting

5.10.1 Ground Investigation Report

(1) <REQ>The Ground Investigation Report shall conform to EN 1997-1, 12.2.

<additional requirements to be added>

5.10.2 Geotechnical Design Report

(1) <REQ>The Geotechnical Design Report shall conform to EN 1997-1, 12.3.

<additional requirements to be added>

5.10.3 Geotechnical Construction Record

(1) <REQ>The Geotechnical Construction Record shall conform to EN 1997-1, 12.4.

(2) <REQ> Details of the ground conditions encountered and the foundations as executed shall be reported in accordance with EN 1997-1, 12.4.

6 Piled foundations

6.1 Scope

(1) <REQ> This Clause shall apply to the design of piles, pile groups, and piled rafts.

(2) <RCM> Piles should be classified in accordance with Table 6.1.

NOTE 1. The pile class is used to determine resistance factors, see 6.6.4.

NOTE 2. Examples of piles in different classes are given in Annex C.

Table 6.1 – Classification of piles

Pile type	Description	Class
Displacement pile	Pile installed in the ground without excavation of material, causing the ground to be displaced radially as well as vertically	High displacement
		Low displacement
Replacement pile	Pile installed in the ground after the excavation of material	Continuous flight auger
		Bored
Pile not listed above		Unclassified

<Drafting note regarding Table 6.1: PT4 needs guidance whether two classes are needed for replacement piles [as given in the current published EN 1997-1] or whether a single class is sufficient. If two classes are suggested, TG3 is asked for proposals, suitable names and a specification for these two classes.>

6.2 Basis of design

6.2.1 Design situations

(1) <REQ> Design situations shall conform to EN 1997-1, 4.2.2.

(2) <REQ> Design situations for piled foundations shall include:

- applied axial, transverse, bending moment or shear forces in any combination;
- static, cyclic, dynamic or impact loads
- accidental or seismic actions;
- loading due to lateral or vertical ground displacements;
- pile imperfections that result in additional bending moment or shear loads;
- the potential impact of pile execution on previously constructed piles.

6.2.2 Geometrical data

6.2.2.1 General

(1) <REQ> Values of geometrical data for the design of piled foundations shall be determined according to EN 1997-1, 4.4.4.

(2) <RCM> The Geotechnical Design Model should extend to a sufficient depth below the anticipated base of the piled foundation and include all surrounding ground within the zone of influence that could affect the resistance and behaviour of the piles or piled foundations.

(3) <REQ> The Geotechnical Design Model shall include full details of the groundwater conditions that could affect either the design or execution of the piled foundation.

6.2.2.2 Pile geometry

(1) <REQ> Pile dimensions shall be selected according to the pile type and method of execution, the stability of the ground, and the susceptibility of the ground to changes caused by pile installation, taking into account potential bulging of the pile and oversized or undersized bores.

(2) <REQ> The adverse effect of pile imperfections (including positional and verticality tolerances or curvature of the pile shaft) that affect pile behaviour shall be taken into account in the verification of limit states.

6.2.2.3 Pile groups

(1) <RCM> The spacing of piles in groups should be selected according to the pile type, method of execution, proposed sequence of execution, pile length, ground conditions, and pile behaviour.

(2) <RCM> Pile spacings should be sufficient to avoid damage to previously constructed piles, allowing for pile positional and verticality tolerances.

NOTE 1. Minimum pile spacings are specified in 6.8.

(3) <PER> Wider pile spacings may be adopted for pile lengths longer than 20 m to cater for pile installation tolerances.

(3) <PER> Closer pile spacings may be used when the piles form part of an embedded earth retaining structure.

6.2.3 Actions and environmental influences

6.2.3.1 General

(1) <REQ> Actions and environmental influences on piled foundations shall be determined according to EN 1997-1, 4.3.1.

(2) <REQ> The interaction between the structure, piled foundation, and ground shall be considered when verifying limit states.

(3) <RCM> The non-linearity of the resistance-displacement curve of axially and transversally loaded piles should be considered for pile and structural design.

6.2.3.2 Dynamic and cyclic loading

<Drafting note: PT6 to advise on how to deal with dynamic and cyclic loading>

(1) <REQ> The effect of repeated or high frequency loading shall be determined.

(2) <REQ> The adverse effects of cyclic and dynamic stresses in piled foundations on long-term bearing and transverse resistance shall be considered.

NOTE 1. Cyclic and dynamic stresses can result in reduced ground strength and stiffness leading to additional pile displacements and loss of resistance.

NOTE 2. In coarse fills and soils, cyclic and dynamic stresses can result in densification of the ground leading to increased stiffness, particularly in the horizontal direction.

NOTE 3. The compression, tension or lateral pile resistances can be significantly affected if the cyclic load range is greater than about 20%, or the cyclic load amplitude is greater than about 10% of the ultimate static pile resistances.

6.2.3.3 Actions due to ground displacement

(1) <REQ> The adverse effects of vertical and horizontal movement of the ground on the piled foundation shall be considered.

NOTE 1. See 6.5.2 for a method of calculating downdrag action on piles.

(2) <REQ> The adverse effects of nearby construction activity on the piled foundation shall be considered.

(3) <RCM> The adverse effects of the pile execution resulting in ground movement that could impact on nearby structures should be considered.

6.2.4 Limit states

(1) <REQ> In addition to the limit states specified in EN 1997-1, 8.2.1, the following ultimate limit states shall be verified for all types of piled foundations:

- failure of the ground surrounding the piled foundation;
- failure of the ground between individual piles;
- failure of the structural pile element;
- combined failure of the ground and the structural pile element;
- failure of the supported structure caused by excessive pile movement.

(2) <RCM> Ultimate limit states other than those given in (1) should be verified as necessary.

(3) <REQ> In addition to the limit states specified in EN 1997-1, 9, the following of serviceability limit states shall be verified for all types of piled foundations:

- excessive pile settlement
- excessive differential settlements;
- excessive downdrag;
- excessive heave;
- excessive transverse movement;
- excessive movement or distortion of the supported structure caused by pile movement.

(4) <RCM> Serviceability limit states other than those given in (3) should be verified as necessary.

6.2.5 Robustness

(1) <REQ> The design of piled foundations shall be modified to account for any significant variations from the expected pile behaviour encountered during driving or variations from expected ground conditions revealed during boring.

6.2.6 Ground investigation

(1) <REQ> Ground investigation for piled foundations shall conform to EN 1997-1, 4.1.9.2, and EN 1997-2.

(2) <REQ> The minimum number of ground profiles and their maximum plan spacing shall conform to EN 1997-2, depending on the Geotechnical Category.

(3) <REQ> For piled foundations in soils or very weak and weak rock masses, the minimum depth of investigation below the anticipated base of the piled foundation d_{min} shall be determined from Formula (6.1):

$$d_{min} = max(5\ m; 3D; p_{group}) \quad (6.1)$$

where:

D is the base diameter (for circular piles) or one-third of the perimeter (for non-circular piles) of the pile with the largest base;

p_{group} is the smaller dimension of a rectangle circumscribing the group of piles forming the foundation, limited to a maximum of 25 m

(4) <REQ> For piled foundations on or in strong homogenous rock masses, d_{min} shall be determined from Formula (6.2):

$$d_{min} = max(2\ m; 3D) \quad (6.2)$$

(5) <REQ> The ground investigation shall include any combination of the following:

- field tests to allow direct correlation with the pile shaft and base resistance;
- field tests to determine the shear strength and stiffness of ground;
- geological description of the ground conditions;
- sampling from boreholes to allow laboratory determination of the shear strength and stiffness.

(6) <RCM> For piled foundations on or in rock mass, the ground investigation should also include:

- rotary core drillholes to provide undisturbed core samples;
- assessment of any core loss, fracturing and joint spacing;
- a full geological core description including estimates of rock strength;
- laboratory measurement of the compressive strength of the rock.

(7) <REQ> The ground investigation shall determine ground conditions over the full depth of the piled foundation including any overlying fills or low strength soils and not be limited to the anticipated founding stratum at or below the pile base.

(8) <PER> The scope of the ground investigation may be extended to include:

- site trials and prototype pile installation;
- installation of piles for load testing;
- observation of spoil from bored piles;
- measurement of drive blows for driven piles;
- drive energy analysis;
- static load testing;
- dynamic impact load testing;
- rapid load testing.

(9) <PER> If the ground investigation includes site trials or installation of piles for load testing that provide additional information about the Ground Model, the number of other ground investigation profiles may be reduced, provided the overall scope of the investigations conforms to (1) to (8).

(10)<RCM> The chemical composition and aggressiveness of the ground and groundwater should be determined during the ground investigation.

6.2.7 Geotechnical reliability

6.2.7.1 Geotechnical Complexity Class

(1) <RCM> In addition to EN 1997-1, 4.1.2.3, other features should be considered when selecting the Geotechnical Complexity Class for piled foundations.

NOTE 1. The other features are given in Table 6.2 (NDP) unless the National Annex gives different features.

Table 6.2 (NDP) – Selection of Geotechnical Complexity Class for piled foundations

Geotechnical Complexity Class	Complexity	General features causing uncertainty
GCC 3	Higher	Considerable uncertainty regarding ground conditions or any of the following apply unless there is comparable experience or evidence of previous successful use: difficult ground conditions friction piles in very low strength ground vertical or horizontal ground movements site instability significant cyclic, dynamic or repeated loading
GCC 2	Normal	GCC2 should be selected if GCC1 and GCC3 are not relevant
GCC 1	Lower	All of the following conditions apply: negligible uncertainty regarding the ground conditions no ground movements

<Drafting note: PT6 to advise on what constitutes significant cyclic, dynamic or repeated loading>

6.2.7.2 Geotechnical Category

(1) <RCM> Piled foundations should be classified in Geotechnical Category 2 or 3.

6.3 Materials

6.3.1 Ground properties

(1) <REQ> Ground properties shall be determined according to EN 1997-1, 5.1-5.4, and EN 1997-2.

(2) <PER> The following non-exhaustive list of ground parameters may be used to calculate axial or transverse pile resistance:

- cone resistance from Cone Penetration Tests;
- corrected blow counts from Standard Penetration Tests;
- limit pressure from Pressuremeter Tests;
- weight density of the ground;
- weight density of groundwater;
- effective stress parameters of fill, soil or weak rock;
- constant volume effective stress parameter of soil;
- undrained shear strength of fill or soil;
- unconfined compressive strength of rock

(3) <PER> The following non-exhaustive list of ground parameters may be used to calculate pile settlement, heave, or transverse movement:

- weight density of the ground;
- weight density of groundwater;
- shear stiffness;
- Young's modulus of elasticity

(4) <RCM> The effect of subsequent excavation, placement of overburden, or changes in groundwater on the values of test results should be taken into account.

(5) <RCM> Verification of limit states should be based on ground parameters that represent the strength and stiffness of the ground after pile execution, unless the selected design method implicitly allows for execution effects.

(6) <REQ> The adverse effects of ground disturbance due to pile execution shall be considered.

(7) <PER> The beneficial effects of compaction and densification of coarse soils below the base and coarse soils and fills around the shaft of displacement piles may be considered when selecting ground properties for design.

(8) <REQ> The adverse effects of loosening of coarse soils below the base and coarse soils and fills around the shaft of replacement piles shall be considered when selecting ground properties for design.

(9) <REQ> The adverse effects on the interface pile shaft friction of smearing, remoulding, and softening of high strength heavily over-consolidated clays and extremely weak mud rocks during pile execution shall be considered.

6.3.2 Steel

(1) <REQ> Steel for piles or piled foundations and the values of steel parameters shall conform to EN 1993-1-1 and EN 1993-5.

(2) <REQ> Hot rolled steel products shall conform to EN 10025, hot finished structural hollow sections shall conform to EN 10210 and cold formed hollow steel sections shall conform to EN 10219.

(3) <REQ> Hot rolled steel sheet piling shall conform to EN 10248 and cold formed steel sheet piling shall conform to EN 10249.

(4) <REQ> The durability of steel for piles or piled foundations shall conform to EN 1993-5.

6.3.3 Steel reinforcement

(1) <REQ> Reinforcement for concrete piles and grout and mortar micropiles shall conform to EN 10080 and EN 1992-1-1.

(2) <REQ> Hollow steel reinforcement bars used as reinforcing elements shall conform to EN 10210, EN ISO 683-1 and EN ISO 683-2.

6.3.4 Ductile cast iron

(1) <REQ> Ductile cast iron for piles or piled foundations and the values of cast iron parameters shall conform to EN 1561.

6.3.5 Plain and reinforced concrete

(1) <REQ> Concrete for piled foundations shall be specified in accordance with and conform to EN 1992-1-1 and EN 206.

(2) <REQ> Exposure classes for concrete shall conform to EN 206 and concrete cover requirements to EN 1992-1-1.

NOTE 1. For the majority of reinforced concrete piles or piled foundations constructed in natural ground, the exposure class will be classified as XA1, XA2 or XA3. Currently EN 1992-1-1 does not provide guidance for the cover allowance for durability for these exposure classes.

(3) <REQ> In the absence of guidance for durability purposes, the minimum cover required for environmental conditions $c_{min,dur}$ shall be 25 mm for reinforced concrete used for both precast and cast-in-place piles.

(4) <REQ> The allowance for deviation Δc_{dev} shall be 50 mm for concrete cast against the ground and 10 mm for precast piles.

(5) <PER> The value for Δc_{dev} for precast piles may be reduced in accordance with EN 1992-1-1, 6.4.3(3) when fabrication is subject to a quality assurance system with measurement of concrete cover.

6.3.6 Plain and reinforced grout and mortar

(1) <REQ> Grout and mortar used for small diameter minipiles and micropiles shall be specified in accordance with and conform to EN 1992-1-1, EN 206, EN 445 and EN 447 as appropriate.

(2) <REQ> Exposure classes for grout and mortar and rules for durability and cover shall conform to 6.3.5(2) to (5).

6.3.7 Timber

<Drafting note: New standard in preparation for timber piles. This clause will be updated when this becomes available.>

(1) <REQ> Timber grading for piled foundations shall conform to the general requirements of EN 14081-1.

(2) <REQ> The minimum grade of timber shall be SS for softwoods or HS for hardwoods conforming to EN 1912 Tables 1 and 2.

(3) <REQ> Timber for piled foundations and the values of timber strength and stiffness parameters shall conform to EN 1995-1-1 and ASTM D25-12.

NOTE 1. Further guidance can be obtained from the American Wood Preservers Institute (2002) or BRE (2003).

(4) <RCM> Timber piles should be subject to preservative treatment in accordance with EN 8417.

(5) <PER> Timber piles without preservative treatment may be used provided the piles are installed below the groundwater table and remain fully submerged throughout their service life.

(6) <REQ> The durability of timber parameters shall conform to EN 8417 and EN 1995-1-1.

6.4 Groundwater

(1) <REQ> Pile design shall be based on the groundwater conditions that apply in the ground after installation and during the service life of the pile.

(2) <REQ> Assessment of the design groundwater pressure shall conform to EN 1997-1, 6.

(3) <REQ> The exposure classes for concrete or chemical environment for other materials in contact with groundwater shall be determined from and conform to EN 206, EN 1992-1-1 or EN 1993-1-1, as appropriate.

6.5 Geotechnical analysis

6.5.1 General

(1) <PER> Combined axial and lateral loading may be analysed by separating each load component and applying the principle of superposition, provided pile internal stresses and displacement behaviour remain substantially elastic.

(2) <PER> Pile design for cyclic, dynamic, and impact loads may be based on more complex load testing or advanced analysis to verify performance under ultimate and serviceability limit state conditions.

6.5.2 Effect of ground displacement

6.5.2.1 General

(1) <REQ> Actions due to ground displacement shall be modelled either by treating the displacement as an action or as an equivalent design force (design action).

(2) <RCM> Evaluation of an equivalent force should take account of the strength and stiffness of the ground, together with the source, magnitude and direction of the ground displacement. The most unfavourable values of the strength and stiffness of the moving ground should be assumed.

6.5.2.2 Downdrag (negative shaft friction)

(1) <REQ> The verification of limit states shall take account of downdrag caused by moving ground and shall determine whether the drag settlement results in a serviceability limit state in the overall structure.

(2) <REQ> The adverse effect of the drag force shall be included in the structural design of the pile for both serviceability and ultimate limit states.

(3) <RCM> The effect of the downdrag or negative shaft friction should be modelled by carrying out an interaction analysis to determine the depth of the neutral plane L_{dd} corresponding to the point where the pile settlement s_{pile} equals the ground settlement s_{ground}.

NOTE 1. This also marks the boundary between negative shaft friction above, and positive shaft friction below the neutral plane.

(4) <RCM> The interaction analysis should provide force, displacement and strain profiles for the full depth of the pile to enable the representative drag force D_{rep} acting on the pile shaft above the neutral plane to be determined.

(5) <PER> For simple cases, approximate assumptions may be adopted to identify the level of the neutral plane allowing the ground displacement to be treated as an equivalent drag force.

(6) <PER> If the pile settlement is greater than the settlement of the surrounding ground, the neutral plane may be assumed to be located at the ground surface.

(7) <PER> If the pile settlement is much smaller than the settlement of the surrounding ground, the neutral plane may be assumed to be located at the base of the settling layer.

(8) <RCM> The equivalent drag force D_{rep} should be determined from Formula (6.3):

$$D_{\mathrm{rep}} = \pi D \int_0^{L_{\mathrm{dd}}} \tau_{\mathrm{s}} \cdot \mathrm{dz} \tag{6.3}$$

where:

D is the diameter of the pile for circular piles or equivalent diameter for non-circular piles;

τ_s is the unit shaft friction at depth z;

L_{dd} is the depth to the neutral plane.

NOTE 1. Calculation models for downdrag are included in Annex C.

(9) <RCM> The value selected for the unit shaft friction should be based on upper (superior) ground parameters, in order to provide a cautious estimate of the downdrag force.

6.5.2.3 Heave

(1) <REQ> Verification of the pile compression or tensile resistance shall take account of uplift or ground heave which could take place during execution, before piles are fully loaded by the structure.

(2) <RCM> Verification of serviceability limit states shall take account of short- or long-term ground heave sufficient to cause unacceptable uplift to the pile element or to result in a serviceability limit state in the overall structure.

(3) <PER> Long-term heave may be disregarded where the imposed permanent actions exceed the heave load.

(4) <REQ> The adverse effect of ground heave shall be included in the structural design of the pile to ensure tensile failure of the pile does not occur.

6.5.2.4 Transverse loading

(3) <REQ> Verification of the pile transverse resistance and displacement shall take account of actions on piles originating from the adverse effect of ground movements or asymmetric loads around a pile.

6.5.3 Design of axially loaded single piles

6.5.3.1 Design by calculation

(1) <PER> The axial resistance of a single pile may be based on the results of field and laboratory testing or comparable experience.

(2) <REQ> The axial resistance of a single pile designed by calculation shall be determined by one of the following methods:

- using derived ground properties determined for the various geotechnical units based on evaluation of all results of field and laboratory tests (Method A, the Ground Model Method); or
- using derived ground properties or by direct correlations with individual profiles of field or laboratory tests (Method B, the Model Pile Method).

(3) <REQ> The validity of the method used to assess the base and shaft resistance of a pile shall be proved by documented load testing of comparable piled foundations and case histories that confirm that the method provides reliable pile resistance and performance.

NOTE 1. Some methods of calculating base and shaft resistance are included in Annex C.

(4) <REQ> For piles subject to downdrag or heave, the additional drag or uplift force acting on the pile shall be included in the pile bearing and settlement verifications.

(5) <RCM> The axial compressive resistance R_c of a single pile should be determined from Formula 6.4:

$$R_c = R_b + R_s \tag{6.4}$$

where:

R_b is the pile base resistance;

R_s is the pile shaft resistance.

(6) <RCM> The weight of the pile element should be included as an action in the calculation model, in which case the beneficial contribution of overburden should be included in the axial compressive resistance at the pile base.

(7) <PER> The weight of the pile element and the additional resistance at the pile base due to overburden pressure may both be disregarded provided that:

- the pile weight and the contribution to resistance due to overburden pressure are approximately equal;
- downdrag is not significant;
- the soil or fill does not have a very low weight density;
- the pile does not extend above the surface of the ground.

(8) <RCM> The pile base resistance R_b in compression should be determined from Formula 6.5:

$$R_b = A_b \cdot q_b \tag{6.5}$$

where:

q_b is the end bearing or base stress;

A_b is the area of the pile base.

(9) <RCM> The pile shaft resistance R_s in compression should be determined from Formula 6.6:

$$R_s = \sum_i A_{s,i} \cdot q_{s,i} \tag{6.6}$$

where:

$q_{s,i}$ is the shaft friction in the various geotechnical units;

$A_{s,i}$ is the area of the pile shaft in the various geotechnical units.

(10) <RCM> The pile shaft resistance in tension R_{st} should be determined from Formula 6.7:

$$R_{st} = \sum_i A_{s,i} \cdot q_{st,i} \tag{6.7}$$

where:

$q_{st,i}$ is the shaft friction in tension in the various geotechnical units;

$A_{s,i}$ is the area of the pile shaft in the various geotechnical units.

6.5.3.2 Design by testing

(1) <PER> The axial resistance of a single pile may be determined from the results of static, dynamic impact, or rapid load Investigation Tests.

(2) <RCM> Pile design based on load testing should be validated by a calculation, especially where it is necessary to modify the design to cater for different design situations or to make use of comparable experience.

(3) <RCM> The compressive resistance of a single pile R_c should be determined from the results of static pile load testing, provided adjustments are made to the results to account for any drag force or temporary hold-up.

(4) <RCM> The tensile resistance of a single pile R_t should be assessed from the results of static pile load testing, provided adjustments are made to account for any temporary hold-up.

(5) <PER> The compressive resistance of a single pile R_c may be determined from the results of dynamic impact or rapid load tests provided adjustments are made to account for any drag force or temporary hold-up.

(6) <RCM> The compression resistance from a dynamic impact test should be determined from the maximum applied test load calculated either by a closed form solution or by signal matching.

(7) <REQ> Results of dynamic impact or rapid load tests in fine soils shall only be used to determine R_c if there is site-specific calibration against static load testing.

(8) <RCM> The validity of the interpreted results from dynamic impact or rapid load tests should be demonstrated by static load tests carried out in parallel to allow direct site-specific correlation.

(9) <REQ> In the absence of site-specific correlations, the validity of dynamic impact or rapid load testing shall have been established using static load testing previously carried out in documented comparable situations on the same pile type, with similar geometry, in comparable ground conditions, and tested to similar load levels.

(10) <PER> Allowance for any potential pile set- up may be included provided this has been either verified by pile tests at different point of times or alternatively or established in documented comparable situations on the same type of pile, with similar geometry, in comparable ground conditions tested to similar load levels.

6.5.3.3 Wave equation analysis

(1) <PER> The compressive resistance of a single pile may be determined from the results of wave equation analysis provided the analysis has previously been calibrated against the results of static load tests on the same pile type, with similar geometry, and in comparable ground conditions.

(2) <RCM> Validation of the compressive resistance determined from wave equation analysis should be carried out based on a minimum number of Control Tests as specified in Table 6.4.

6.5.3.4 Pile driving formulae

(1) <REQ> The compressive resistance of a single pile shall not be based on a pile driving formula unless the formula has previously been calibrated against static load tests on the same type of pile, with similar geometry, and in comparable ground conditions.

(2) <PER> Dynamic impact or rapid load tests may be used to calibrate the pile driving formulae provided that the results of these tests have previously been calibrated against the results of static load tests on the same type of pile, with similar geometry, and in comparable ground conditions.

(3) <RCM> Validation of the compressive resistance determined from pile driving formulae should be carried out based on a minimum number of static, dynamic impact or rapid site-specific Control Tests which conform to Table 6.4.

6.5.3.5 Prescriptive measures

(1) <PER> The axial compressive resistance of a single pile may be determined from prescriptive measures provide there is comprehensive comparable local experience with piles of similar geometry, ground conditions and loading.

NOTE 1. Prescriptive measures for pile design can be specified in the National Annex.

(2) <PER> Validation of an acceptable pile design based on prescriptive measures may be carried out based on extensive documented previous use, or a minimum number of Control Tests as specified in Table 6.4.

6.5.3.6 Observational Method

(1) <PER> The axial compressive resistance of a single pile may be determined by the Observational Method provided there is comparable local experience with piles of similar type, dimensions, and loading conditions.

(2) <RCM> Validation of an acceptable pile design based on the Observational Method should be carried out using detailed pile installation records, together with a minimum number of Control Tests as specified in Table 6.4.

6.5.4 Design of transversely loaded single piles

(1) <PER> The transverse resistance of a single pile may be determined by calculation or by testing.

(2) <REQ> The transverse resistance of a single pile verified by calculation shall be based on derived ground properties determined for the various geotechnical units from the results of field and laboratory tests (Method A).

(3) <PER> The transverse resistance of a single pile may be calculated assuming rotation or translation as a rigid body for short piles (ratio between pile length and diameter less than 6) or bending failure and local yielding for longer piles.

NOTE 1. Note that in many cases, design of piles for transverse loading is likely to be controlled by serviceability rather than ultimate limit states and simple mechanisms might not be sufficient.

(4) <RCM> Variation of soil stiffness should be taken into account for predicting behaviour of laterally loaded piles.

(5) <REQ> The analysis of a transversely loaded pile shall include the possibility of structural failure of the pile in the ground.

(6) <REQ> The transverse resistance of a single pile verified by pile load testing shall take account of the different deformation mechanism between a load test carried out on a free-headed pile and the in-service behaviour where the pile caps and sub-structure will result in significant head fixity to the pile.

6.5.5 Design of pile groups

(1) <REQ> Verification of limit states shall be carried out by numerical, analytical, or empirical calculation methods, based on the observed performance of comparable pile group foundations.

(2) <REQ> Pile group design shall take into account that the resistance and load-displacement behaviour of individual piles in a group might show significant variation compared to the behaviour of single piles.

(3) <RCM> Calculation of pile group effects should take into account the potential changes in stress and density of the ground resulting from pile installation together with the effects of group behaviour due to the structural loads.

(4) <PER> Pile group design may be based on the results of load tests on individual piles provided the interaction between individual piles and pile group effects are taken into account.

(5) <REQ> The ultimate resistance of a pile group shall be taken as the lower of:

the sum of the resistances of the individual piles in the group;
the resistance of the block of ground bounded by the perimeter of the pile group.

(6) <RCM> The ultimate vertical compressive resistance of a pile group R_{group} should be determined from Formula (6.8):

$$R_{\text{group}} = \min\left\{\sum_{i}^{n} R_{\text{c,i}} \,;\, R_{\text{block}}\right\} \tag{6.8}$$

where:

$R_{\text{c,i}}$ is the ultimate vertical compressive resistance of the *i*th pile in the pile group;

n is the number of piles within the piled foundation;

R_{block} is the ultimate vertical compressive resistance of the block of ground bounded by the perimeter of the pile group.

(7) <RCM> In the case of tension loading, the reduction in effective vertical stresses in the ground should be taken into account when deriving the shaft resistance of individual piles in the group.

NOTE 1. Methods for allowing for the reduction in vertical effective stress are included in Annex C.

(8) <RCM> For pile groups, the effects of interaction, the shadow effect of closely spaced piles, and head fixity should be accounted for when deriving transverse resistance from the results of calculations or load tests on individual test piles.

(9) <REQ> The adverse effects of pile interaction shall be taken into account.

(10) <RCM> Where interaction effects between piles are significant, the verification of limit states should be based on numerical models that consider non-linear ground-pile response and can cater for combined axial, lateral, and moment loading.

(11) <PER> If the piles in a group are connected by a pile cap that has sufficient strength and stiffness to be able to redistribute a significant part of the load, the verification of geotechnical ultimate and serviceability limit states for each individual pile may be omitted.

(12) <REQ> If the piles in a group are connected by a pile cap that is unable to redistribute loads, verification of limit states shall be based on the weakest pile in the group.

6.5.6 Design of piled rafts

(1) <RCM> The ultimate vertical compressive resistance of a piled raft R_{group} should be determined from Formula (6.9):

$$R_{\text{group}} = \left(\sum_{i}^{n} R_{\text{c,i}} + R_{\text{raft}} \right) \tag{6.9}$$

where:

R_{raft} is the ultimate vertical compressive resistance of the raft.

(2) <RCM> The design of piled rafts should consider the following interaction effects as shown in Figure 6.1:

- pile-soil interaction;
- pile-pile interaction;
- raft-soil interaction;
- pile-raft interaction.

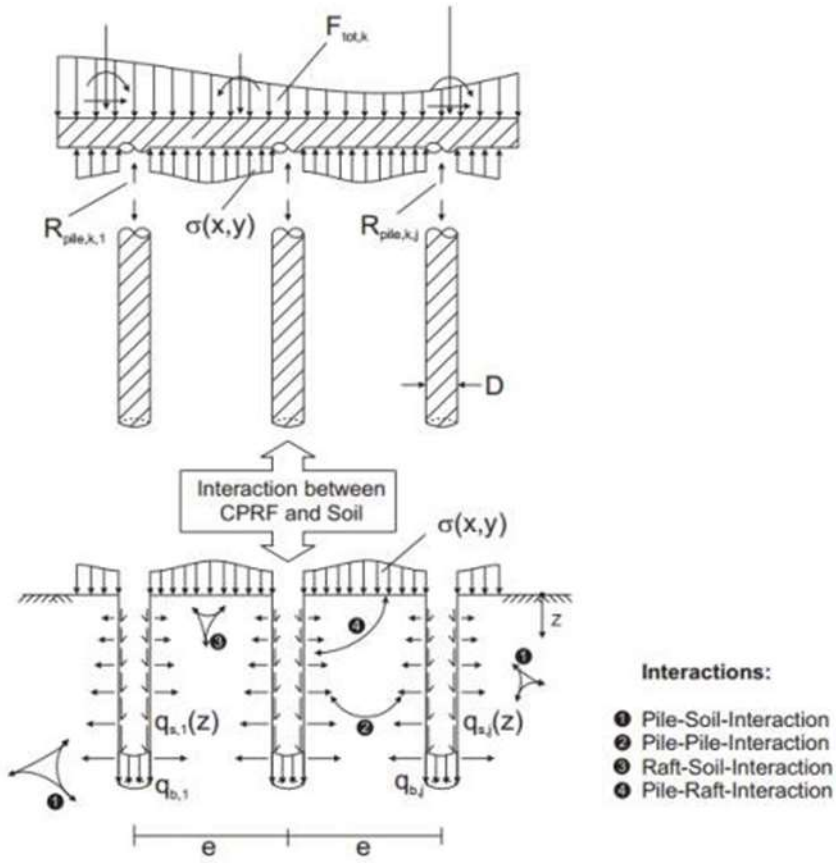

Figure 6.1 – Interaction effects in a pile raft

<Drafting NOTE: this figure will be simplified in the final version>

(3) <PER> Analysis of a piled raft may be based on numerical modelling including nonlinear stress–strain models for the ground, the structural flexural stiffness of the raft, and the interactions between ground, raft and piles.

(4) <PER> Verification of the ultimate limit state of individual piles within a piled raft may be omitted, provided an ultimate limit state of the combined structure is not exceeded.

(5) <PER> Determination of the ultimate vertical compressive resistance of a raft foundation R_{raft} without piles may be carried out in a simplified manner in accordance with Clause 5.

NOTE 1. This is a simplistic assessment as it does not include for the interaction effect of the piles on the behaviour of the raft foundation.

(6) <PER> Provided that an ultimate limit state in the combined structure is not exceeded, the shaft and base resistances of individual piles used for settlement reduction of a raft foundation may be allowed to reach their limiting value.

NOTE 1. This is particularly beneficial when piles are used for the purpose of settlement or raft bending moment reduction.

NOTE 2. The limiting value here is not necessarily the same as that of a single pile, since it includes pile-raft interaction effects.

(7) <PER> A simplified design approach for a raft with settlement reducing piles may be adopted based on a raft design conforming to Clause 5, but with the piles modelled as appropriate upward forces applied at the chosen pile locations.

6.5.7 Displacement of piled foundations

6.5.7.1 General

(1) <REQ> Verification of piled foundation settlement or transverse displacement shall be based on the results of load tests or analytical, numerical or empirical calculations, or prescriptive methods based on the observed performance of comparable single piles or pile groups.

NOTE 1. Except for special cases, it is unlikely that load testing of pile groups is feasible, and performance of pile groups will need to be verified by other methods.

(2) <RCM> The validity of analytical, numerical or empirical calculation methods should be demonstrated using documented load testing of comparable pile foundation and case histories to confirm that the design methods can provide reliable parameter values and reliably predict pile settlement and transverse behaviour.

(3) <REQ> Downdrag shall be considered for both SLS and ULS conditions and shall take account of the relevant pile foundation loading and the strain mechanisms between the piles and the surrounding fill or soil in accordance with 6.5.2.

6.5.7.2 Displacement of single piles

(1) <PER> The settlement or transverse displacement of a single pile may be calculated using any of the following design methods:

- closed form solutions;
- numerical models.

NOTE 1. Owing to rapid degradation of mobilized ground stiffness with pile head movement, design methods based on nonlinear stiffness models are more appropriate for calculating the transverse response of a pile foundation.

(2) <RCM> Elastic shortening of the pile shaft under axial loading should be included in the calculation of pile head settlement.

6.5.7.3 Displacement of pile groups and piled rafts

(1) <PER> Analysis of the settlement and transverse displacement of pile groups and piled rafts may be carried out using one or more of the following models:

- interaction factor method;
- numerical models.

(2) <RCM> Pile group design should take account of movement and loading effects caused by pile to pile interaction through the ground and the impact on the load-displacement behaviour of individual piles as well as behaviour of pile group.

(3) <PER> For preliminary design, as an alternative to the methods described above, the displacement of a pile group may be calculated using any of the following simplified methods:

- displacement ratio method;
- equivalent raft method;
- equivalent pier method.

(4) <RCM> For a pile group with a stiff pile cap, the verification of settlement should take account that each pile has to settle by the same amount, resulting in axial loads in the piles varying across the group.

6.5.8 Validation of pile design by site-specific load testing or comparable experience

(1) <RCM> Pile design should be validated using site-specific static load testing to confirm design parameter values, verify compressive or tensile resistance, and establish behaviour under serviceability limit state conditions.

(2) <PER> Pile design against compression loading may also be validated by dynamic impact tests or rapid load tests provided that these tests have been validated by static pile load tests.

(3) <PER> Site-specific load testing may be omitted where there is sufficient comparable experience or evidence of previous successful use for the same type of pile with similar geometry installed in similar ground conditions.

NOTE 1. A classification of additional information for validation of the pile design is given in Table 6.3.

Table 6.3 – Classification of additional information used to validate pile design

Classification[a]	Pile load tests on same site	Comparable experience[b]
Comprehensive	Investigation tests as specified in Table 6.4 (NDP)	Extensive comparable experience or database
Limited	Control tests as specified in Table 6.4 (NDP)	Limited comparable experience or database
Minimum	No pile load tests	Minimum comparable experience or no database
[a]Classification based on the higher of the two columns [b]Comparable experience is defined in EN 1997-1, 3.1.1.17. For piled foundations, this includes documented data from different sites for similar pile types under similar ground and loading conditions such as historical pile load test data, research or evidence of successful use based on measurements or observations of pile performance.		

(5) <RCM> The number of site-specific pile loads tests n_{test} to conform to Table 6.3 should be selected according to the type or purpose of the load test.

NOTE 1. Values of n_{test} are given in Table 6.4 (NDP) unless the National Annex gives different values.

Table 6.4 (NDP) – Minimum quantity of load testing for validation of pile design

Type of load test	Validation of design by	
	Investigation Tests	Control Tests
Static load test	1 or ≥ 0.5% N	2 or ≥ 1% N
Rapid load test	2 or ≥ 1.0% N	4 or ≥ 2% N
Dynamic impact load test	3 or ≥ 2.5% N	6 or ≥ 5% N
N = total number of working piles for a reference area of 2,500m²		

(6) <PER> When selecting the minimum quantity of test piles for validation of design from Table 6.4 (NDP), different pile types, geometries, or loading conditions may be considered as a single set.

NOTE 1. Testing for validation purposes does not need to cover every different pile type, geometry, or loading.

(7) <RCM> If pile load tests are used for validation of design by calculation, the minimum number of Investigation or Control Tests to be performed should be selected from the options given in Table 6.4 (NDP).

(8) <PER> The minimum number of pile load tests may be adjusted proportionately when carrying out both Investigation and Control Tests, or when carrying out a mix of static, rapid load or dynamic impact load tests.

(9) <RCM> All pile load testing should be carried out in accordance with 6.9.

(10)<REQ> The design of the piles shall take into account any adverse effect of Control Tests on the load-settlement behaviour of the test pile during its service life.

6.6 Ultimate limit states

6.6.1 Single piles

6.6.1.1 General

(1) <REQ> The axial and transverse resistances of a single pile shall be determined by calculation, testing, prescriptive methods, or the Observational Method in accordance with 6.5.3 and 6.5.4.

6.6.1.2 Verification of axial compressive resistance

(1) <REQ> The axial compressive resistance of a single pile shall be verified using Formula (6.10):

$$F_{cd} \leq R_{cd} \tag{6.10}$$

where:

F_{cd} is the design axial compression applied to the pile including an allowance for any potential drag force (see 6.6.1.5);

R_{cd} is the pile's design axial compressive resistance.

(2) <REQ> The design axial compressive resistance R_{cd} shall be determined from Formula (6.11):

$$R_{cd} = \frac{R_{c,rep}}{\gamma_{Rc} \cdot \gamma_{Rd}} \quad or \quad \left(\frac{R_{b,rep}}{\gamma_{Rb} \cdot \gamma_{Rd}} + \frac{R_{s,rep}}{\gamma_{Rs} \cdot \gamma_{Rd}}\right) \tag{6.11}$$

where:

$R_{c,rep}$ is the pile's representative total resistance in axial compression;

$R_{b,rep}$ is the pile's representative base resistance in axial compression;

$R_{s,rep}$ is the pile's representative shaft resistance in axial compression;

γ_{Rd} is a model factor;

$\gamma_{Rc}, \gamma_{Rb}, \gamma_{Rs}$ are resistance factors.

NOTE 1. The values of γ_{Rc}, γ_{Rb}, and γ_{Rs} are given in Table 6.11 (NDP) unless the National Annex gives different values.

NOTE 2. The values of γ_{Rd} are given in Table 6.5 (NDP) unless the National Annex gives different values.

Table 6.5 (NDP) – Model factor γ_{Rd} for verification of axial pile resistance by calculation

Verification by		Model factor γ_{Rd}
Calculation Method A Ground Model Method	Comprehensive additional information[1]	1.3
	Limited additional information[1]	1.55
	Minimum additional information[1]	1.8
Calculation Method B Model Pile Method	Ménard Pressuremeter test	1.15
	Cone penetration test	1.2
	CPT with comprehensive comparable experience	1.0
[1]Classification of additional information is given in Table 6.3.		

Table 6.6 (NDP) – Model factor γ_{Rd} for verification of axial pile resistance by testing

Verification by		Model factor γ_{Rd}			
		Fine soils	Coarse soils	Rock	Competent Rock
Static load tests		1.0	1.0	1.0	1.0
Dynamic impact and rapid load tests (closed form solutions)[a]	Shaft bearing	Not permitted	Signal matching	Signal matching	1.2
	End bearing		1.3	1.3	1.2
Dynamic impact and rapid load tests (signal matching) [a]	Shaft bearing	1.5	1.1	1.2	1.1
	End bearing	1.4	1.2	1.2	1.1
Wave equation analysis		Not permitted	1.6	1.5	1.4
Pile driving formulae			1.8	1.7	1.5
[a]When dynamic impact and rapid load tests are not calibrated by site-specific static load testing, but by comparable experience only, the values for γ_{Rd} are increased as follows: +0.1 when calibration is based on comprehensive additional information, as defined in Table 6.3 +0.25 when calibration is based on limited additional information, as defined in Table 6.3					

<Drafting NOTE>The model factors in Table 6.6 (NDP) have been increased (provisionally) compared to current EN 1997 so that they are > 1.0 (so that the model factor correctly reflects uncertainty in the model). The values are still under review by PT4 and once agreed the correlation factors for testing will be re-calibrated to the new model factors>

(3) <RCM> Dynamic impact and rapid load tests should be calibrated by site-specific static load testing unless there is limited or comprehensive comparable experience as specified in Table 6.3.

(4) <RCM> Wave equation analysis or pile driving formulae should be calibrated by site-specific static load testing unless there is comprehensive comparable experience as specified in Table 6.3.

6.6.1.3 Verification of axial tensile resistance

(1) <REQ> The axial tensile resistance of a single pile shall be verified using Formula (6.12):

$$F_{td} \leq R_{td} \qquad (6.12)$$

where:

F_{td} is the design axial tension applied to the pile;

R_{td} is the pile's design axial tensile resistance.

(2) <REQ> The design axial tensile resistance R_{td} shall be determined from Formula (6.13):

$$R_{td} = \frac{R_{t,rep}}{\gamma_{Rst} \cdot \gamma_{Rd}} \tag{6.13}$$

where:

$R_{t,rep}$ is the pile's representative axial tensile resistance;

γ_{Rd} is a model factor;

γ_{Rst} is a resistance factor.

NOTE 1. The value of γ_{Rst} is given in Table 6.11 (NDP) unless the National Annex gives different values.

NOTE 2. Values of γ_{Rd} are given in Table 6.5 (NDP) unless the National Annex gives different values.

6.6.1.4 Verification of transverse resistance

(1) <REQ> The transverse resistance of a single pile shall be verified using Formula (6.14):

$$F_{tr,d} \leq R_{tr,d} \tag{6.14}$$

where:

$F_{tr,d}$ is the design transverse force applied to the pile including an allowance for any potential transverse force due to moving ground (see 6.6.1.5);

$R_{tr,d}$ is the pile's design transverse resistance.

(2) <REQ> If using the Material Factor Approach (MFA), the design transverse resistance $R_{tr,d}$ shall be determined according to EN 1990, Formula (8.12), by applying material factors γ_M to the representative values of the material properties X_{rep}.

NOTE 1. The value of γ_M is given in Table 6.11 (NDP) unless the National Annex gives different values.

(3) <REQ> If using the Resistance Factor Approach (RFA), the design transverse resistance $R_{tr,d}$ shall be determined according to EN 1990, Formula (8.13), by applying resistance factors $\gamma_{R,tr}$ to the representative transverse resistance of the single pile $R_{tr,rep}$.

NOTE 1. The value of $\gamma_{R,tr}$ is given in Table 6.11 (NDP) unless the National Annex gives different values.

(11)<REQ> For transversely loaded piles in multi-layered soils, superior (upper) and inferior (lower) values of soil stiffness in different layers should be combined in the most adverse manner.

NOTE 1. For example, upper bound stiffness for stiff soil layers and lower bound for less stiff layers.

6.6.1.5 Downdrag

(1) <RCM> Downdrag should be classified as a permanent action arising from the relative axial movement when ground settlement exceeds pile settlement.

NOTE 1. See Annex C.11 for detailed models and combinations of actions for downdrag.

(2) <REQ> The design drag force due to settling ground shall be determined from Formula (6.15):

$$D_{\mathrm{d}} = \gamma_{\mathrm{F,drag}} D_{\mathrm{rep}} \tag{6.15}$$

where:

D_{d} is the design drag force or transverse force due to moving ground;

D_{rep} is the representative drag force or transverse force due to moving ground;

$\gamma_{\mathrm{F,drag}}$ is a partial action factor.

NOTE 1. The value of γ_{drag} is given in Table 6.11, unless the National Annex gives a different value.

<Drafting NOTE: PT4 requests guidance on whether to move combinations of actions from Annex C.11, Formula (C.6b) to here>

6.6.1.6 Transverse ground loading

(1) <RCM> Transverse forces on the pile due to moving ground should be classified as permanent actions arising from relative transverse movement between the ground and the pile.

<Drafting NOTE: PT4 requests guidance on this clause for transverse moving ground: should moving ground be considered a) using a spring interaction analysis with factors of effects-of-actions or b) as a transverse load with factors on actions?>

6.6.1.7 Calculation of representative resistances

(1) <REQ> For design by calculation using Method A, the representative resistance of a single pile R_{rep} shall be determined from Formula (6.16):

$$R_{rep} = R_{calc} \tag{6.16}$$

where:

R_{rep} is $R_{\mathrm{c,rep}}$ for compression, $R_{\mathrm{t,rep}}$ for tension, or $R_{\mathrm{tr,rep}}$ for transverse resistance, as appropriate;

R_{calc} is the calculated pile resistance based on ground parameters.

(2) <REQ> For design by calculation using Method B and for design assisted by testing, the representative resistance of a single pile R_{rep} shall be determined from Formula (6.17):

$$R_{rep} = min\left\{\frac{(R_m)_{mean}}{\xi_{m,mean}}; \frac{(R_m)_{min}}{\xi_{m,min}}\right\} \tag{6.17}$$

where:

$(R_m)_{mean}$ is the mean computed or measured pile resistance for a set of profiles of ground investigation field tests or piles subject to load testing;

$(R_m)_{min}$ is the minimum computed or measured pile resistance for a set of profiles of ground investigation field tests or piles subject to load testing;

$\xi_{m,mean}$ is a correlation factor for the mean of the measured values;

$\xi_{m,min}$ is a correlation factor for the minimum of the measured values.

(3) <REQ> Profiles of field test results shall only be considered as a single data set if they are obtained in an area of the site with the same ground conditions and over the same depths as the constructed piles.

(4) <REQ> For each single data set defined in (3), the coefficient of variation (CoV) of the computed pile resistance for each profile shall be calculated.

NOTE 1. Annex C gives some background and details of how the CoV can be computed.

(5) <REQ> The values of the correlation factors $\xi_{m,mean}$ and $\xi_{m,min}$ for Method B shall be determined based on the number of profiles in the single data set and the coefficient of variation CoV calculated in (4).

NOTE 1. Values of $\xi_{m,mean}$ and $\xi_{m,min}$ for verification by calculation using Method B are given in Table 6.7 (NDP) unless the National Annex gives different values.

NOTE 2. The correlation factors given in in Table 6.7 (NDP) assume profiles arranged on a grid with maximum spacing of 30 m.

Table 6.7 (NDP) – Correlation factors for pile design by calculation (Method B)

Correlation factor	Coefficient of variation	Number of profiles						
		1	2	3	4	5	7	10
$\xi_{m,mean}$	≤ 12%	Use $\xi_{m,min}$ alone		1.30	1.28	1.28	1.27	1.26
	15%			1.40	1.39	1.38	1.37	1.36
	20%			1.67	1.64	1.63	1.61	1.60
	≥ 25%			1.98	1.95	1.93	1.90	1.89
$\xi_{m,min}$	All	1.4	1.27	1.23	1.20	1.15	1.12	1.08

(6) <REQ> Results of pile load tests shall only be considered as a single data set if they relate to similar pile types, pile geometry, ground and loading conditions, and the local site area is no greater than 2500 m².

NOTE 1. Values of $\xi_{m,mean}$ and $\xi_{m,min}$ for verification by static load, rapid load, and dynamic impact tests are given in Table 6.8 (NDP), Table 6.9 (NDP), and Table 6.10 (NDP), respectively, unless the National Annex gives different values.

Table 6.8 (NDP) – Correlation factors for pile design based on results of static load tests

Correlation factor	Number of static load tests				
	1	**2**	**3**	**4**	**5**
$\xi_{m,mean}$	1.4	1.3	1.2	1.1	1.0
$\xi_{m,min}$	1.4	1.2	1.05	1.0	1.0
Numbers of static load tests are per a reference area of 2,500 m²					

Table 6.9 (NDP) – Correlation factors for pile design based on rapid load tests

Correlation factor	Number of rapid load tests					
	2	**3**	**5**	**10**	**20**	**>50**
$\xi_{m,mean}$	1.6	1.55	1.5	1.45	1.4	1.3
$\xi_{m,min}$	1.5	1.45	1.35	1.3	1.25	1.2
<Drafting NOTE> PT4 requests guidance on suitable correlation factors for > 50 tests						

Table 6.10 (NDP) – Correlation factors for pile design based on dynamic impact tests

Correlation factor	Number of dynamic impact tests					
	3	**5**	**10**	**20**	**>50**	**All**
$\xi_{m,mean}$	1.55	1.5	1.45	1.4	1.3	1.25
$\xi_{m,min}$	1.45	1.35	1.3	1.25	1.2	1.15
<Drafting NOTE> PT4 requests guidance on suitable correlation factors for > 50 tests						

(7) <PER> Table 6.10 (NDP) may also be applied to pile design based on wave equation analysis or pile driving formulae calibrated by site-specific static load testing or comprehensive comparable experience.

(8) <PER> The values of $\xi_{m,mean}$ and $\xi_{m,min}$ may be reduced by 10% for pile groups or piled rafts that are able to redistribute load from a single pile to other piles in the group without any significant additional settlement of the foundation.

(9) <REQ> If $\xi_{m,mean}$ and $\xi_{m,min}$ are reduced according to (8), then the verification of limit states in the pile cap shall take into account the load redistribution.

6.6.2 Pile groups and piled rafts

(1) <REQ> The design resistance of a pile group or piled raft $R_{d,group}$ shall be verified using Formula (6.18):

$$F_{d,group} \leq R_{d,group} \tag{6.18}$$

where:

$F_{d,group}$ is the design action applied to the pile group or piled raft;

$R_{d,group}$ is the design resistance of the pile group or piled raft.

(2) <REQ> If using the Material Factor Approach (MFA), the design resistance $R_{d,group}$ shall be determined according to EN 1990, Formula (8.12), by applying material factors γ_M to the representative values of the material properties X_{rep}.

NOTE 1. Values of γ_M are given in Table 6.11 (NDP) unless the National Annex gives different values.

(3) <REQ> If using the Resistance Factor Approach (RFA), the design resistance $R_{d,group}$ shall be determined from Formula (6.19):

$$R_{d,group} = \frac{R_{rep,group}}{\gamma_R} or \left(\frac{\sum_i^n R_{c,rep,i}}{\gamma_{Rt}} + \frac{R_{rep,raft}}{\gamma_{R,raft}} \right) \tag{6.19}$$

where:

γ_R is a resistance factor for the pile group axial compressive resistance;

γ_{Rt} is a resistance factor for individual pile axial compressive resistance;

$\gamma_{R,raft}$ is a resistance factor for the pile raft structure;

$R_{rep,raft}$ is the representative ultimate vertical compressive resistance of the raft.

NOTE 1. The values of γ_R and γ_{Rt} are given in Table 6.11 (NDP) unless the National Annex gives different values.

NOTE 2. The value of $\gamma_{R,raft}$ is given in Clause 5.

6.6.3 Excessive pile deformation

(1) <REQ> Ultimate limit states caused by excessive deformation of a piled foundation shall be verified according to EN 1990, 8.3.1(2).

6.6.4 Partial factors

6.6.4.1 Single piles

(1) <RCM> The ultimate axial compressive or tensile resistance of single piles should be verified using the resistance factor approach, with:

- factors γ_F applied to actions according to Formula (8.4) of EN 1990; and
- factors γ_R applied to ground resistance, using Formula (8.13).

NOTE 1. Values of the partial factors for single piles are given in Table 6.11 (NDP) for persistent and transient design situations unless the National Annex gives different values.

NOTE 2. Unless the National Annex gives a specific choice, the approach to be used is as specified by the relevant authority or agreed for a specific project with the relevant parties.

(2) <REQ> If Method A or B is used to verify the axial resistance of a single pile, then either combination (c) or (d) of Table 6.11 (NDP) shall be verified.

NOTE 1. For Method A, combination (d) is used unless the National Annex gives a different choice.

NOTE 2. For Method B, combination (c) is used unless the National Annex gives a different choice.

(3) <RCM> The ultimate transverse resistance of single piles should be verified using the material factor approach, with:

- factors γ_F applied to actions according to Formula (8.4) of EN 1990; or
- factors γ_E applied to effects-of-actions according to Formula (8.5) of EN 1990; and
- factors γ_M applied to ground properties according to Formula (8.12) of EN 1990.

NOTE 1. Values of the partial factors for single piles are given in Table 6.11 (NDP) for persistent and transient design situations unless the National Annex gives different values.

(4) <REQ> If the material factor approach is used to verify transverse resistance of a single pile, then both combinations (a) and (b) given in Table 6.11 (NDP) shall be verified.

(5) <PER> If the resistance factor approach is used to verify axial resistance of a single pile, then either combinations (c) or (d) given in Table 6.11 (NDP) may be verified.

(6) <PER> Provided the conditions specified in EN 1997-1 4.4.3(10) are satisfied, the values of γ_{Rv} (= γ_b, γ_s, or γ_t) given in Table 6.11 for transient design situations may be multiplied by a factor $K_{Rv,tr} \leq 1{,}0$ provided that the product $K_{Rv,tr}\,\gamma_{Rv}$ is not itself less than 1.0.

NOTE 1. For piled foundations, the value of $K_{Rv,tr}$ is 1.0 unless the National Annex gives a different value.

Table 6.11 (NDP). Partial factors for the verification of ultimate resistance of single piles for fundamental (persistent and transient) design situations

Verification of	Partial factor on	Symbol	Material factor approach (MFA)		Resistance factor approach (RFA)				
			(a)	(b)	Pile class	(c)		(d)	
Axial compressive resistance	Actions and effects-of-actions[1]	γ_F and γ_E	Not Used		All	DC1		DC3	
	Downdrag	$\gamma_{F,drag}$				1.15		1.0	
	Ground properties[2]	γ_M				Not factored			
	Base and shaft resistance in compression	$\gamma_b \mid \gamma_s$			High displacement	1.2	1.0	1.3	1.3
					Low displacement	1.2	1.0	1.35	1.3
					CFA	1.1	1.1	1.45	1.3
					Bored	1.1	1.1	1.6	1.3
					Unclassified	1.35	1.25	1.9	1.5
	Total resistance in compression	γ_t			High displacement	1.1		1.3	
					Low displacement			1.35	
					CFA			1.4	
					Bored			1.5	
					Unclassified	1.3		1.75	
Axial tensile resistance	Actions and effects-of-actions[1]	γ_F and γ_E	Not Used		All	DC1		DC3	
	Ground properties[2]	γ_M				Not factored			
	Shaft resistance in tension	γ_{st}			High displacement	1.15		1.6	
					Low displacement			1.6	
					CFA			1.6	
					Bored			1.6	
					Unclassified	1.6		1.9	
Transverse resistance	Actions and effects-of-actions[1]	γ_F and γ_E	DC4	DC3	Not Used				
	Ground properties[2]	γ_M	M1	M3					
	Transverse resistance	γ_{Re}	Not factored						
Test proof load	Action	γ_{test}	Not Used		All	1.1		1.4	

[1]Values of the partial factors for Design Cases (DCs) 1, 3, and 4 are given in EN 1990 Annex A.
[2]Values of the partial factors for Sets M1 and M3 are given in EN 1997-1 Annex A.
<Drafting NOTE: PT5 requests feedback on the proposed values for $\gamma_{F,drag}$>

6.6.4.2 Pile groups and piled rafts

(1) <RCM> The ultimate axial resistance of pile groups and piled rafts should be verified using either:

- the material factor approach, with:
  - factors γ_F applied to actions according to Formula (8.4) of EN 1990; and
  - factors γ_M applied to ground properties according to Formula (8.12) of EN 1990;
- or the resistance factor approach, with:
  - factors γ_E applied to the actions according to Formula (8.4) of EN 1990 or to the effects-of-actions according to Formula (8.5) of EN 1990; and

– factors γ_R applied to ground resistance, using Formula (8.13) of EN 1990.

NOTE 1. Unless the National Annex gives a specific choice, the approach to be used is as specified by the relevant authority or agreed for a specific project with the relevant parties.

NOTE 2. Values of the partial factors are given in Table 6.12 (NDP) for persistent and transient design situations unless the National Annex gives different values.

(2) <RCM> The ultimate transverse resistance and combined axial and transverse resistance of pile groups and piled rafts should be verified using the material factor approach, with:

– factors γ_F applied to actions according to Formula (8.4) of EN 1990; or
– factors γ_E applied to effects-of-actions according to Formula (8.5) of EN 1990; and
– factors γ_M applied to ground properties according to Formula (8.12) of EN 1990.

NOTE 1. Values of the partial factors for pile groups and piled rafts are given in Table 6.12 (NDP) for persistent and transient design situations unless the National Annex gives different values.

(3) <REQ> If the material factor approach is used to verify the resistance of a pile group or piled raft, then both combinations (a) and (b) given in Table 6.12 (NDP) shall be verified.

(4) <PER> If the resistance factor approach is used to verify axial resistance of a pile group or piled raft, then either combinations (c) or (d) given in Table 6.12 (NDP) may be verified.

Table 6.12 (NDP). Partial factors for the verification of ultimate resistance of pile groups and piled rafts for fundamental (persistent and transient) design situations

Verification of	Partial factor on	Symbol	Material factor approach (MFA)		Resistance factor approach (RFA)
			(a)	(b)	
Axial resistance	Actions and effects-of-actions[1]	γ_F and γ_E	DC4	DC3	Use partial factors from Table 6.11 (NDP)
	Ground properties[2]	γ_M	M1	M3	
	Resistance	γ_R	Not factored		1.4
Transverse resistance	Actions and effects-of-actions[1]	γ_F and γ_E	DC4	DC3	Not Used
	Ground properties[2]	γ_M	M1	M3	
	Combined axial and transverse	γ_{Re}	Not factored		
Combined axial and transverse resistance	Same as for transverse resistance				
[1]Values of the partial factors for Design Cases (DCs) 3 and 4 are given in EN 1990 Annex A. [2]Values of the partial factors for Sets M1 and M3 are given in EN 1997-1 Annex A.					

6.6.5 Structural design and verification

(1) <RCM> The structural resistance of single piles should be verified in accordance with:

- EN 1992-1-1 for reinforced and plain concrete, grout or mortar piles;
- EN 1993-1-1 and EN 1993-5 for steel piles;
- EN 1994-1-1 for composite steel and concrete piles;
- EN 1995-1-1 for timber piles.

<Drafting note> PT4 seeks guidance in whether to specify a partial factor for stiffness or to specify that (unfactored) upper and lower values should be considered>

(2) <RCM> Ground stiffness should be determined taking into account the magnitude of any axial or transverse deflection of the pile.

(3) <RCM> The representative value of stiffness should be selected as either an upper or lower value, depending on which is more critical.

NOTE 1. Upper values are sometimes critical when transversal loads are present (e.g. from settling soil).

(4) <RCM> Bending stresses due to initial curvature, eccentricities and induced deflection should be taken into account together with stresses due to transverse load.

(5) <RCM> Buckling and torsional stability should be verified taking account of second order effects, particularly for long slender piles.

NOTE 1. Annex C gives examples.

6.7 Serviceability limit states

(1) <REQ> Serviceability limit states for piled foundations shall be verified in accordance with EN 1990, 8.4.

(2) <REQ> Serviceability behaviour of piled foundations shall be determined in accordance with 6.5.8.

(3) <PER> Explicit verification of the serviceability of a piled foundation may be omitted provided serviceability performance of the piled foundation can be demonstrated by comparable experience conforming to Table 6.3.

NOTE 1. For example, explicit verification of serviceability is often omitted for axially loaded piles founded in medium to dense coarse soils, medium to high strength fine soils, and rock.

(4) <PER> Settlement of a single pile loaded in compression that is founded in medium to dense coarse soils, medium to high strength fine soils, and rock may be verified using Formula (6.22):

$$F_{cd,SLS} \leq \frac{R_{s,rep}}{\gamma_{SLS}} \tag{6.22}$$

where:

$F_{cd,SLS}$ is the design axial compression applied to the pile at the serviceability limit state, including potential downdrag forces;

$R_{s,rep}$ is the representative value of shaft resistance;

γ_{SLS} is a partial factor for shaft resistance in the serviceability limit state

NOTE 1. The value of γ_{SLS} is 1.2 for piles founded on soils and 1.1 for piles founded on rock, unless the National Annex gives different values.

(5) <REQ> Verification of the serviceability limit state for pile groups and or piled rafts shall be based on modelling of the piled foundation that accounts for non-linear stiffness of the ground, the flexural stiffness of any structure and the interactions between the ground, structures, and piles.

6.8 Execution

6.8.1 General

(1) <REQ> The execution piled foundations shall conform to relevant execution standards as follows:

- EN 1536 for bored piles;
- EN 12699 for driven displacement piles;
- EN 14199 for micropiles;
- EN 12016 for sheet piles used for bearing resistance;
- EN 1538 for diaphragm walls for bearing resistance.

(2) <RCM> The centre-to-centre spacing of piles at their base level should be no less than $S_{spacing}$.

NOTE 1. Values of $S_{spacing}$ are given in Table 6.13 (NDP) unless the National Annex gives different values.

NOTE 2. Interaction of piles spaced at a distance greater than $S_{spacing}$ can still occur.

Table 6.13 (NDP). Minimum spacing of piles on plan to avoid disturbance during execution

Pile class	Spacing, $S_{spacing}$
High displacement	5D
Low displacement	3D
Low/High replacement	2D
For circular piles, D = pile diameter For non-circular piles, D = one-third of the enveloping perimeter	

6.8.2 Execution control

(1) <REQ> Supervision of the pile execution shall conform to the execution standards given in 6.8.1.

6.8.3 Supervision

(1) <REQ> The Inspection Plan required by EN 1997-1, 10.3, shall include verification of:

- the ground and groundwater conditions;
- the location and general layout of the piled foundations;
- any adjacent settlement sensitive structures (above and below ground);
- the sequence of works;
- the working level and working platform.

(2) <REQ> If the ground or groundwater conditions are found to be significantly worse than assumed in the Geotechnical Design Model, the design shall be revised accordingly.

(3) <REQ> If execution of the works invalidates the design assumptions, the design shall be revised accordingly.

6.8.4 Monitoring

(1) <REQ> Monitoring of piled foundations shall conform to the execution standards given in 6.8.1.

(2) <RCM> The Monitoring Plan should include the following, as necessary:

- settlement, lateral and distortion measurements of the superstructure;
- vibration measurements;
- settlement, lateral and distortion measurements of nearby sensitive structures.

(3) <RCM> Geotechnical monitoring should include visual inspection and measurements of the behaviour of the piled foundation during execution and load testing in order to:

- check the validity of the Geotechnical Design Model and other design assumptions;
- check the validity of predictions of performance made during the design.

(4) <RCM> Monitoring of pile execution should be carried out for all piles over the full depth of each pile and should include:

- piling rig monitoring and instrumentation records;
- drive blow records for driven piles;
- visual inspection of spoil and observations of ground conditions for auger bored and drilled piles.

6.8.5 Maintenance

(1) <REQ> Maintenance of piled foundations shall conform to the execution standards given in 6.8.1.

6.9 Testing

6.9.1 General

(1) <REQ> Investigation Tests shall be carried out when verification of limit states is to be based on the results of pile load testing.

(2) <REQ> Investigation Tests shall be performed when using a pile type or installation method for which there is no comparable experience or when piles have not previously been tested under comparable ground or loading conditions.

(3) <RCM> Control Tests should be carried out on working piles during the main piling works to specified loads in excess of the design serviceability load for the purpose of verifying acceptable pile movement.

(4) <RCM> Control Tests should also be carried out when observations during pile execution indicates conditions that deviate from the anticipated Ground Model or the pile behaviour differs significantly and unfavourably from the design.

(5) <RCM> Acceptance tests should be carried out to verify the integrity of all piles susceptible to installation damage or other piles when execution procedures cannot be monitored in a reliable way.

(6) <PER> Integrity and material quality tests may be carried out on cast-in-place piles to verify conformance of the pile to the design criteria.

(7) Integrity tests for piles include non-destructive tests (to confirm the as-built condition of the pile shaft).

NOTE 1. Material quality tests include cube or cylinder strength tests on concrete or grout.

(8) <RCM> Installation and monitoring records should be inspected after pile execution to verify conformance of the pile to its design criteria.

6.9.2 Trial piles

(1) <RCM> Investigation pile load tests should be carried out on non-working trial piles installed for test purposes only before the commencement of the main piling works or a specific part of the works.

<Drafting NOTE: comments are welcome on whether to include the following clause or not>

<PER> Investigation tests may be carried out using dynamic impact tests on working piles for piles founded on or in competent rock provided it is verified that the pile has sufficient structural strength.

</End NOTE>

(2) <RCM> Trial piles should be installed for the purpose of investigating the appropriateness of the chosen type of pile and for confirming its design, dimensions, pile resistance and performance.

(3) <REQ> If only one trial pile is installed, it shall be located in the most adverse ground conditions identified on the project site.

(4) <REQ> Execution of the trial pile shall be performed in an identical manner to that proposed for the working piles and shall conform to the relevant execution standards given in 6.8.1.

(5) <PER> In cases where it is impractical to install or construct full-size large diameter trial piles, a smaller diameter trial pile can be installed provided that:

- the ratio of the trial pile to working pile diameter is not less than 0.5;
- the trial pile is constructed or installed in an identical manner to the proposed working piles;
- the trial pile is instrumented to allow separation of the base and shaft resistance during any test

(6) <REQ> For axial load tests, a test proof load shall be determined from Formula (6.23) to allow for the additional drag force or temporary support resistance for piles subject to downdrag or different design situations during their service life.

(7) <RCM> For axial load tests, a maximum test load should be adopted equal to either, the design verification load plus the anticipated representative design action, or the required ultimate resistance, whichever is the larger.

6.9.3 Test proof load

(1) <REQ> The proof load P_P for Investigation Tests shall be determined from Formula (6.23):

$$P_P = R_{rep} + (D_{dd} + D_{support}) \quad (6.23)$$

where:

R_{rep} is an estimate of the pile's ultimate resistance in the working condition;

D_{dd} is the design drag load or transverse load as appropriate to the type of load test;

$D_{support}$ is the design vertical or transverse temporary support force.

(2) <PER> The design support force $D_{support}$ can be taken equal to the representative support force assuming this can be treated as a favourable permanent action.

(3) <PER> When the pile ultimate resistance is unknown at the time of test, the proof load P_p may be determined from Formula (6.24):

$$P_P = (\gamma_{Rd} \cdot \xi_m \cdot \gamma_R \cdot F_{d,SLS}) + (D_{dd} + D_{support}) \quad (6.24)$$

where:

γ_{Rd} is the model factor (if any) used in the verification of ultimate resistance;

ξ_m is the correlation factor (if any) used in the verification of ultimate resistance;

γ_R is the resistance factor to be used in the verification of ultimate resistance;

$F_{d,SLS}$ is the design action at the serviceability limit state.

(4) <REQ> The test proof load P_P for Control Tests shall be determined from Formula (6.25):

$$P_P = (\gamma_{test}\, F_{d,SLS}) + (D_{dd} + D_{support}) \quad (6.25)$$

where:

γ_{test} is a partial factor that depends on the Design Case.

NOTE 1. The value of γ_{test} is given in given in Table 6.11 (NDP), unless the National Annex gives a different value.

6.9.4 Static load tests

(1) <REQ> The execution of the test pile shall be carried out in an identical manner to that proposed for the working piles and shall conform to the execution standards given in 6.8.1.

(2) <REQ> Static load tests in compression shall conform to EN ISO 22477-1. Static load tests in tension and transverse loading shall conform to the execution standards given in 6.8.1.

(3) <RCM> A minimum of two maintained load cycles should be carried out for an Investigation Test. The first cycle should be loaded to the representative SLS test load. The second cycle should be loaded to the required maximum test proof load P_p.

(4) <PER> A single maintained load cycle may be adopted for a Control Test loaded to the required maximum test proof load P_p.

(5) <REQ> The interpretation of load testing should take account of the systematic and random variations that exist in the ground and the variability of the test pile installation and its influence when deriving the pile's resistance.

(6) <PER> Separation of the base and shaft resistance components from a static compression load test may be performed using instrumented test piles or specialist testing procedures.

(7) <REQ> The ultimate resistance in compression from an Investigation Test shall be taken as the load corresponding to a downward plunging failure of the pile, with adjustments for any drag force or temporary support resistance.

(8) <PER> Where it is not possible to define a resistance failure from a static compression load test plot showing a continuous curvature, an equivalent ultimate resistance may be adopted equal either to the maximum applied test load, or a resistance corresponding to the settlement of the pile top in the range 10 to 20 % of the pile base diameter depending on the allowance for elastic compression of the pile shaft.

(9) <PER> Use of a critical creep force conforming to EN ISO 22477-1 may be used as an alternative means of estimating a resistance failure from a static load test.

(10) <REQ> For a tension load test, the ultimate resistance in tension R_t shall be taken as the load corresponding to an uplift pull-out failure of the pile or for a test pile that does not reach an uplift pull-out failure, R_t may be set equal to the maximum applied test load.

(11) <REQ> Interpretation of pile horizontal load test results shall take account of the different deformation mechanism between a load test carried out on a free-headed pile and the in-service behaviour where the pile caps and sub-structure can result in significant head fixity to the pile.

NOTE 1. It is unlikely that a horizontal load test can achieve sufficient displacement to fully mobilize the resistance of the ground to any appreciable depth.

NOTE 2. Under test conditions, the behaviour of the pile will be dominated by the strength, stiffness and variability of the ground over the top few metres of the pile.

6.9.5 Dynamic impact and rapid load tests

(1) <REQ> The execution of the test pile shall be carried out in an identical manner to that proposed for the working piles and shall conform to the execution standards given in 6.8.1.

(2) <REQ> Dynamic impact load tests shall conform to EN ISO 22477-4 and rapid load tests to EN ISO 22477-10.

(3) <REQ> The dynamic impact or rapid load testing shall be carried out to verify the required maximum test proof load P_p.

(4) <REQ> The load testing shall include a process of signal matching to the measured stress wave response curve. The signal matching shall provide an approximate evaluation of shaft and base resistance of the pile as well as a simulation of its load-settlement behaviour.

(5) <RCM> The pile resistance in compression R_c should be assessed from the results of the load testing and set equal to the maximum mobilised resistance, with allowance for any drag force or temporary support resistance.

(6) <RCM> For dynamic impact or rapid load tests carried out on piles installed in fine fills and soils, an additional allowance for potential consolidation and creep should be applied.

6.9.6 Acceptance tests

6.9.6.1 Rig monitoring and instrumentation

(1) <REQ> For continuous flight auger and displacement auger piles, the piling rig shall be fitted with a suitable automated instrumentation and monitoring system capable of measuring the execution metrics throughout the boring and concreting of the pile.

(2) <RCM> Piling rigs used to install driven displacement piles should be fitted with a suitable automated instrumentation and monitoring system capable of measuring the execution metrics throughout the pile driving process.

6.9.6.2 Non-destructive integrity tests

(1) <RCM> All cast-in-place or precast concrete piles shall be subject to non-destructive integrity testing to verify the pile does not include any defects within the shaft and has not been damaged during installation.

(2) <PER> The method for integrity testing may be chosen from the following:

low strain Pile Integrity Test;
thermal integrity profiling;
cross-hole sonic logging method;
distributed fibre optic sensing method.

(3) <PER> Results of dynamic impact load testing may also be used to verify pile shaft integrity.

6.9.6.3 Material testing

(1) <REQ> All materials used in the execution of piles shall be tested to verify that they have met the required project materials criteria.

6.9.6.4 Geometrical testing

(1) <REQ> Acceptance testing shall also include measurements of the as-built pile dimensions of cast-in-place piles at the trim level, together with as-built position and level for all types of pile to verify that working piles have met the required project execution criteria.

6.10 Reporting

6.10.1 Ground Investigation Report

(1) <REQ>The Ground Investigation Report shall conform to EN 1997-1, 12.2.

6.10.2 Geotechnical Design Report

(1) <REQ>The Geotechnical Design Report (GDR) shall conform to EN 1997-1, 12.3.

(2) <REQ> The GDR shall include a Geotechnical Design Model relevant to each design situation, include representative values of actions and material properties used in the design verification.

(3) <REQ> The GDR shall document the verification and design process for all construction phases, together with the final design of the piled foundations.

(4) <REQ> The GDR shall record the Consequence Class, Geotechnical Complexity Class, and Geotechnical Category for each design situation.

(5) <REQ> The GDR shall include a plan of supervision, inspection, monitoring, and maintenance for the pile foundations.

6.10.3 Geotechnical Construction Record

(1) <REQ>The Geotechnical Construction Record (GCR) shall conform to EN 1997-1, 12.4.

(2) <REQ> The GCR shall document all relevant pile execution records, including pile test reports, rig instrumentation data, drive blows, and other details, supervision records, monitoring data and results of any inspections carried out during the installation works.

(3) <REQ> Details of the ground conditions encountered and any other relevant observations shall be reported.

6.10.4 Pile test reports

(1) <REQ> Pile test reports shall conform to EN 1997-1, 12.5, and the execution standards given in 6.8.1.

(2) <REQ> Pile test reports shall include full details of the pile construction including type of pile, method of installation, size, length, material properties and other observations made during installation.

(3) <REQ> Pile load test reports shall conform to 6.9.4 and the relevant execution standards and include applied load and displacement measurements at all stages of the test, together with results of any instrumentation or external measurements.

(4) <REQ> Pile integrity test reports shall be in accordance with the relevant execution standards and include full details and results of the testing.

7 Retaining structures

7.1 Scope

(1) <REQ> This Clause shall apply to structures that retain ground and water.

(2) <REQ> Silos shall be designed according to EN 1991-4.

(3) <REQ> Retaining structures formed of reinforced soil shall be designed in accordance with Clause 9.

7.2 Basis of design

7.2.1 Design situations

(1) <REQ> Design situations shall be selected in accordance with EN 1997-1, 4.2.2.

(2) <REQ> Design situations for retaining structures shall include:

- stages of excavation, construction, and maintenance;
- anticipated future structures or any anticipated future loading or unloading within the zone of influence of the geotechnical structure (see 7.2.3.2(1));
- the effects of waterfront structures, ice, and wave forces.

7.2.2 Geometrical data

7.2.2.1 General

(1) <REQ> Design values of geometrical data for retaining structures shall be determined according to EN 1997-1, 4.4.4.

7.2.2.2 Ground surfaces

(1) <REQ> Design values for the geometry of the retained material shall take account of any variation in actual field values and anticipated excavation or possible scour or erosion in front of the retaining structure.

NOTE 1. Anticipated excavation includes post-construction excavation in front of the structure, e.g. due to buried services maintenance.

(2) <RCM> The design level of the resisting ground should be lowered below the nominal level by an amount Δa given by:

- for a cantilever wall, $\Delta a = \min(0.1\ H;\ 0.5\ \text{m})$, where H is wall height above excavation level;
- for a supported wall, $\Delta a = \min(0.1\ h_s;\ 0.5\ \text{m})$, where h_s is the distance between the lowest support and excavation level.

(3) <PER> Values of Δa smaller than those given in (2), including 0, may be used when the surface level is specified to be controlled reliably throughout the relevant execution period.

(4) <RCM> Values of Δa larger than those given in (2) should be used when the surface level is particularly uncertain.

NOTE 1. This may be the case for marine structures during dredging operations.

7.2.2.3 Water levels

(1) <REQ> The positions of free water and phreatic surfaces shall be selected from data for the hydraulic and hydrogeological conditions at the site (see 7.2.5.3(6) and EN 1997-1, 6.3.1(6)).

(2) <RCM> Special care should be taken in selecting water levels in low permeability ground, since measured water levels are not necessarily representative

(3) < REQ> The adverse effects of spatial variation in permeability on the groundwater regime shall be considered. <Proposed to transfer to Part 1>

(4) <REQ> Possible obstruction of natural groundwater flow caused by linear underground structures shall be considered.

NOTE 1. The obstruction might be caused by the retaining structure itself.

(5) <RCM> Unless a reliable drainage system is installed (see 7.2.5.3), or infiltration is prevented, or an efficient piezometric control is ensured (in accordance with 7.8.4), an accidental design situation corresponding to a water table at the surface of the retained material of low permeability should be considered.

(6) <RCM> Due to uncertainties in spatial variations and anisotropy of permeability, the extent of external drawdown due to dewatering under the excavation should be carefully evaluated and monitored.

(7) <REQ> If beneficial reductions in groundwater pressure are assumed for design of the retaining structure, then the Observational Method shall be used. Otherwise, drawdown shall be neglected for design purposes.

7.2.3 Actions and environmental influences

7.2.3.1 General

(1) <REQ> Actions and environmental influences on retaining structures shall be determined according to EN 1997-1, 4.3.1.

7.2.3.2 Surcharges

(1) <REQ> The design situation shall include any load that acts on or near the surface of the retained ground within the zone of influence of the geotechnical structure.

NOTE 1. Examples of loads that act on or near the surface of the retained ground include nearby buildings, parked or moving vehicles or cranes, stored material, goods and containers.

NOTE 2. The lateral extent of zone of influence typically ranges between one and two times the excavation depth and possibly larger in highly over-consolidated soils or excavations in slopes.

(2) <REQ> Variable actions arising from traffic loads acting on retaining structures shall be modelled as uniform distributed loads.

<Drafting NOTE: the following NOTE has been added as a placeholder until prEN 1991-2 is available for review by SC7. This NOTE will be updated as appropriate following that review</NOTE>

NOTE 1. The value of the uniform distributed load varies from 10 to 20 kPa depending on road category. For national railways the value of the uniform distributed load, over an area occupied by the tracks, is 50 kPa and for metros/tramway/light railways is 30 kPa.

(3) <REQ> The adverse effects of repeated surcharge loading shall be considered.

NOTE 1. Repeated surcharge loading includes, for example, loads imposed by moveable cranes.

7.2.3.3 Impact forces

(1) <PER> Design values of collision impact forces may take account of the energy absorbed by the colliding mass and by the retaining system.

NOTE 1. Collision impact forces can be caused, for example, by waves, ice floes, or traffic.

(2) <PER> For transverse impacts on retaining structures, the increased stiffness and strength exhibited by the retained ground due to strain rate, wave propagation and damping effects may be considered.

7.2.3.4 Temperature effects

(1) <REQ> The adverse effects of temperature changes shall be considered, especially when determining the loads in struts and props.

NOTE 1. Direct sunlight effects can often be reduced by specific measures, such as coating or painting.

(2) <RCM> Measures should be taken to prevent potential ice lenses from forming in the ground behind a retaining structure.

NOTE 2. Formation of ice lenses can occur in silt with access to free water leading to a significant volume expansion of the soil.

NOTE 3. Possible measures include selection of suitable backfill material, drainage, or insulation.

7.2.4 Limit states

7.2.4.1 General

(1) <REQ> In addition to the limit states specified in EN 1997-1, 8.2.1, the following ultimate limit states shall be verified for all types of retaining structure:

- failure of a structural element, including the wall, an anchor, waling or strut;
- failure of the connection between elements;
- combined failure in the ground and in the structural element;
- excessive movement of the retaining structure, which may cause collapse of the structure or nearby structures or services that rely on it.

(2) <RCM> Ultimate limit states other than those given in (1) should be verified as necessary.

(3) <RCM> Preventive measures should be taken to avoid the occurrence of ultimate limit states in nearby structures that are particularly sensitive to ground movements.

NOTE 1. Preventive measures are not needed for insensitive structures. The level of reliability achieved by applying the design methods and partial factor values recommended in this standard is normally sufficient to prevent the occurrence of ultimate limit states in nearby structures, provided that adequate construction methods and sequences are adopted.

(4) <REQ> In addition to the limit states specified in EN 1997-1, 9, the following serviceability limit states shall be verified for all types of retaining structure:

- unacceptable leakage through or beneath the wall;
- unacceptable change in the groundwater regime;
- excessive movements of the retaining structure, which may cause damage or affect the appearance or efficient use of the structure or nearby structures or services that rely on it.

(5) <RCM> Serviceability limit states other than those given in (4) should be verified as necessary.

7.2.4.2 Gravity walls

(1) <REQ> In addition to 7.2.4.1(1), the following ultimate limit states shall be considered for gravity walls and for composite retaining structures:

- bearing resistance failure of the soil below the base, taking into account eccentricity and inclination of loads;
- failure by sliding along the base;
- failure by toppling.

(2) <REQ> Limit states for gravity walls shall be verified according to Clause 5, in addition to Clause 7.

7.2.4.3 Embedded walls

(1) <REQ> In addition to 7.2.4.1(1), the following ultimate limit states shall be considered for embedded walls:

- failure by rotation or translation of the wall or parts thereof;
- failure by lack of vertical equilibrium.

(2) <REQ> Limit states for embedded walls shall be verified according to this Clause 7.

7.2.5 Robustness

7.2.5.1 General

(1) <RCM> Retaining structures should be designed so that the approach of an ultimate limit state can be detected by non-intrusive means.

NOTE 1. Non-intrusive means include, for example, deformation monitoring.

(2) <REQ> Retaining structures shall be designed to guard against the occurrence of sudden collapse.

NOTE 1. Retaining structures that robustly sustain multiple load paths so that failure of one component does not lead to collapse of the overall system are not subject to sudden collapse.

(3) <REQ> Appropriate compaction procedures shall be specified with the aim of avoiding excessive additional earth pressures being applied to the retaining structure (see 7.5.7 and Annex D), noting also that under-compaction might lead to settlement behind the structure.

(4) <RCM> Sensitivity of nearby structures to displacements potentially induced by the excavation within its zone of influence should be systematically investigated.

(5) <RCM> The design of retaining structures should take account of the following:

- effects of wall construction, including:
  - provision of temporary support to the sides of excavations;
  - changes of in situ stresses and resulting ground movements caused both by the wall excavation and its installation;
  - disturbance of the ground due to driving or boring operations;
- provision of access for construction;
- the required degree of water tightness of the finished wall;
- the practicability of constructing the wall to reach a stratum of low permeability, so forming a water cut-off;
- the practicability of forming anchors in adjacent ground;
- the practicability of excavating between any propping of retaining walls;
- the ability of the wall to carry vertical load;
- the ductility of structural components;
- access for maintenance of the wall and any associated drainage measures;
- the appearance and durability of the wall and any anchors;
- for sheet piling, the ability of the section to be driven to the design penetration without loss of interlock;
- the stability of borings or slurry trench panels while they are open;
- for fill, the nature of materials available and the means used to compact them adjacent to the wall, in accordance with 5.3 (to be updated).

7.2.5.2 The Observational Method

(1) <PER> The Observational Method may be used to design and excavate in front of embedded retaining structures when comparable experience suggests design assumptions are conservative, or when comparable experience suggests that project risks and opportunities could be better managed by implementation of the Observational Method (see 7.8.4.3(2) and (3)).

(2) <RCM> The Observational Method should be used to design and excavate in front of a retaining structure when the interaction between the ground and that structure is complex or other nearby structures are sensitive to that interaction, and calculation models are not reliable or accurate enough to match design criteria (see 7.8.4.3(1) and (3)).

7.2.5.3 Drainage systems

(1) <REQ> If the safety and serviceability of the designed structure depend on the successful performance of a drainage system, the consequences of its failure shall be considered, with respect to both safety and cost of repair.

(2) <REQ> One of the following measures shall be taken to ensure the reliability of the drainage system:

- a maintenance programme for the drainage system shall be specified and the design shall allow access for this purpose;
- it shall be demonstrated, both by comparable experience and by assessment of any water discharge, that the drainage system will operate adequately without maintenance.

(3) <REQ> The design of the drainage system shall take into account the quantity and pressure of any discharge.

(4) <RCM> The design of the drainage system should also take into account chemical content of any discharge.

7.2.6 Ground investigation

(1) <REQ> Ground investigation for retaining structures shall conform to EN 1997-1, 4.1.9.2, and EN 1997-2.

(2) <REQ> The minimum number of ground profiles and their maximum plan spacing shall conform to EN 1997-2, depending on the Geotechnical Category.

<Drafting NOTE>The following clauses could be transferred to Part 2 and referred to from here</NOTE>

(3) <REQ> The Geotechnical Design Model shall include all ground areas and layers, and expected variations in groundwater levels and pressures likely to influence the limit states considered, in the design of the retaining structure (see 7.6 and 7.7).

(4) <REQ> The Ground Model shall distinguish geotechnical units inside which ground properties may be considered sufficiently uniform to ensure a proper assessment of characteristic values when elaborating the Geotechnical Design Model.

(5) <RCM> Additional ground investigations should be undertaken if the boundaries between geotechnical units are uncertain and the Ground Model data does not allow robust and economical geotechnical design.

NOTE 1. The performance of retaining structures can be adversely affected if weaker geotechnical units in the vicinity of the excavation are not properly considered.

(6) <REQ> If the extent of weaker geotechnical units cannot be reliably defined, the Ground Model shall set their extent based on conservative assumptions.

NOTE 1. Deriving characteristic values without having previously identified weaker geotechnical units increases safety risks and reduces cost efficiency.

(7) <RCM> Investigations should include the installation of sufficient piezometers to measure groundwater within each geotechnical unit. These shall be monitored for sufficient time to enable seasonal changes to be assessed.

7.2.7 Geotechnical reliability

(1) <RCM> In addition to EN 1997-1, 4.1.2.3, the features given in Table 7.1 (NDP) should be considered when selecting the Geotechnical Complexity Class for retaining structures.

Table 7.1 (NDP) Selection of Geotechnical Complexity Class for retaining structures

Geotechnical Complexity Class	Complexity	Examples of general features causing uncertainty
GCC 3	Higher	Considerable uncertainty regarding any of the following: • ground with weak[a] layers • ground with persistent movement • areas of probably site instability Further examples with high[a] complexity: • High sensibility of adjacent structures • Complex interaction with adjacent structures • Poor reliability of the calculation models when applied to particular soils (e.g. weathered rock) • Complex geometry of the structure itself
GCC 2	Normal	GCC2 should be selected if GCC1 and GCC3 are not applicable.
GCC 1	Lower	Negligible risk of the occurrence of an ultimate or serviceability limit state The following conditions apply for retaining structures: • ground conditions which are simple and the properties of which are known from past experience on comparable situations • negligible[a] risk of ground movements • low[a] excavation below the groundwater level
[a]the terms 'weak', 'high', 'low', and 'negligible' are relative to any comparable experience that exists for the particular design situation		

7.3 Materials

7.3.1 Ground properties

(1) ~~<RCM> Representative values of ground properties should be obtained as cautious estimates of their spatially-averaged values within a geotechnical unit.~~ <This clause to be transferred to Part 1>

(2) ~~<RCM> Should the Ground Model not include a reliable assessment of geotechnical units (see 7.2.7), representative values of ground properties should be considered as minimum values of average representative parameters of ground layers around the excavation project.~~ <This clause to be transferred to Part 1 or 2>

(3) <RCM> The most appropriate value of shear resistance (peak or constant volume) should be considered, based on the magnitude of displacements anticipated for the design situation and the limit state being considered.

7.3.2 Steel

(1) <REQ> Steel for retaining structures and the values of steel parameters shall be determined in accordance with EN 1993-1-1 and EN 1993-5.

(2) <REQ> Hot rolled steel products shall conform to EN 10025, EN 10083, and EN 10149, as appropriate.

(3) <REQ> Cold formed hollow steel sections shall conform to EN 10210 and EN 10219, as appropriate.

(4) <REQ> Steel shall conform to EN 10248 for hot rolled sheet piling and EN 10249 for cold formed sheet piling.

(5) <REQ> The durability of steel shall conform to EN 1993-1-1.

7.3.3 Reinforced concrete

(1) <REQ> Concrete for retaining structures shall conform to 6.3.5.

(2) <REQ> Steel reinforcement for retaining structures shall conform to EN 10080, EN 10138, EN 1993-5, and EN 1992-1-1, as appropriate.

(3) <RCM> For cast-in-place concrete structures, calculation of crack width should be based on $c_{min,dur}$ rather than c_{nom}.

NOTE 1. Taking the allowance for deviation Δc_{dev} into account for the calculation of crack width does not provide additional safety with respect to corrosion. Instead, it increases the risk of bad coverage by unduly increasing the density of steel reinforcements and associated risks of bad concrete placement.

NOTE 2. Definitions of $c_{min,dur}$, c_{nom}, and Δc_{dev} are given in EN 1992-1-1.

7.3.4 Timber

<Drafting note: New standard in preparation for timber piles. This clause will be updated when this becomes available.>

(1) <REQ> Timber for retaining structures and the values of timber parameters shall be determined in accordance with EN 1995-1-1.

(2) <REQ> The durability of timber parameters shall conform to EN 1995-1-1.

7.3.5 Improved ground properties

(1) <REQ> In case ground improvement techniques are used, either to form the retaining structure itself, or to improve the adjacent ground, material properties shall conform to Clause 10.

7.4 Groundwater

This clause is not used.

7.5 Geotechnical analysis

7.5.1 Determination of earth pressures

(1) <REQ> Determination of earth pressures shall take account of the expected mode of failure and amount of any movement and strain that occurs at the limit state under consideration.

NOTE 1. The magnitudes of earth pressures and directions of resultant forces are strongly influenced by horizontal and vertical movements of the retaining structure in relation to the soil block, which may vary with time, successive design situations, and limit states being considered.

(2) <RCM> The limit states specified in 7.6 and 7.7 should be verified using one or more of the following calculation models:

- an analytical model:
  - limit equilibrium model;
  - limit analysis;
  - beam-on-springs model;
- a semi-empirical model:
  - earth pressure envelopes;
- a continuum numerical model.

NOTE 1. The advantages and disadvantages of different calculation models are given in Annex D.

NOTE 2. Although their range of application is theoretically larger, continuum numerical models are generally used in combination with analytical models, due to their high sensitivity to parameters that are sometimes difficult to assess.

NOTE 3. Clauses 7.5.2 to 7.5.4 largely refer to analytical models that are commonly used in practice.

(3) <RCM> Total stress analysis should only be used when ground conditions can be shown to be undrained for the construction period considered, with no water pressure being applied either within the soil mass, inside cracks, or at the interface with the wall, and in specific situations for which comparable site experience has proven that such analysis can be carried out safely.

(4) <REQ> Calculations of the magnitudes of earth pressures and directions of forces resulting from them shall take account of:

- the surcharge on and inclination of the ground surface;
- the inclination of the wall to the vertical;
- the water tables and the seepage forces in the ground;
- the swelling potential of the ground;
- the amount and direction of the movement of the wall relative to the ground;
- the horizontal and vertical equilibrium for the entire retaining structure;
- the shear strength and weight density of the ground;
- the inclination of the ground strata and potential discontinuities;
- the rigidity of the structure and its supporting system relative to the stiffness of the ground;
- the wall roughness.

(5) <REQ> The amount of shear stress that can be mobilised at the interface between the ground and the structure shall be determined by the ground/structure interface coefficient (tan δ), where δ is the inclination of stresses applied to the interface.

(6) <REQ> The value of the ground/structure interface coefficient (tan δ) shall satisfy Formula 7.1:

$$\tan\delta \leq k_\delta \times \tan\varphi \qquad (7.1)$$

where:

tan φ is the value of the soil's coefficient of internal friction;

k_δ is a constant depending on the roughness of the ground structure interface and local disturbance during execution.

NOTE 1. The actual value of the interface coefficient can be lower than the maximum one, depending on the relative displacement of the retaining structure in relation to the soil block that might, in specific circumstances, reduce the inclination of earth pressure.

NOTE 2. This reduction in inclination is automatically considered when using continuum numerical models. Explicitly introducing a value lower than the maximum is only relevant for analytical models that do not automatically take the relative displacement into account.

NOTE 3. The assessment of reduced values of the interface coefficient in the presence of structural forces is considered in 7.6.4.2 and more guidance is given in Annex D.

NOTE 4. In cohesive soils, it is commonly assumed that $k_\delta = a/c$, where a is the adhesion to the wall and c the soil's cohesion.

(7) <REQ> The value of k_{ii} shall not exceed 1.0.

(8) <PER> A value of k_{ii} = 1,0 may be assumed for concrete cast directly against soil and for stone infill or backfill used for crib walls and gabions.

(9) <RCM> The value of k_{ii} should not exceed 2/3 for retaining structures formed with smooth surfaces.

NOTE 1. Retaining structures with smooth surfaces include pre-cast concrete and sheet pile walls.

NOTE 2. This limit can also be applied conservatively to retaining structures with rough surfaces.

(10)<RCM> A value of k_{ii} = 0 should be used for steel sheet piles walls immediately after driving into clay or peat.

(11)<REQ> In the case of structures retaining rock masses, calculations of the ground pressures shall take account of the effects of discontinuities in the rock mass, with particular attention to their orientation, spacing, aperture, roughness and the mechanical characteristics of any joint filling material.

<Drafting NOTE>PT6 to review (11) since the mechanical resistance of the matrix itself may be a limiting parameter for specific materials, such as schists>

7.5.2 Limiting values of earth pressure

(1) <REQ> Limiting values of earth pressures shall be determined taking account of the relative movement of the soil and the wall at failure and the corresponding shape of the failure surface.

(2) <RCM> When using tabulated values of earth pressure coefficients or computer software based on limit state analysis, it should be considered that limiting values of earth pressure assuming straight failure surfaces can conflict with interface parameters δ and lead to unsafe results (see 7.5.4(5)).

(3) <RCM> In cases where struts, anchors, or similar structural elements impose restraints on movement of the retaining structure, the possibility of more adverse earth pressures than active and passive values should be considered.

7.5.3 Values of active earth pressure

(1) <PER> For soil in an active state, the component of the total earth pressure normal to the wall face (p_a) at a depth (z_a) below ground surface may be calculated from Formula (7.2):

$$p_a = p'_a + \mathrm{u} \geq p_{a,min} \tag{7.2}$$

where:

p'_a is the component of the effective active earth pressure normal to the wall face, defined in (7.3);

u is the groundwater pressure;

$p_{a,min}$ is the minimum value of p_a.

(2) <RCM> A minimum value of $p_{a,min} > 0$ should be used when very large cohesion values result in no effective pressure being applied over a significant height of the wall.

NOTE 1. Experience suggests that such low pressures do not occur in practice.

<Drafting NOTE>A consensus on the way to assess $p_{a,min}$ has yet to be found. Further discussions needed>

(3) <PER> The component of the effective active earth pressure normal to the wall face (p'_a) at a depth (z_a) below ground surface may be calculated from Formula (7.3):

$$p'_a = K_{a\gamma}(\overline{\gamma_a} \times z_a - u) - K_{ac}c' + K_{aq}q \tag{7.3}$$

where, in addition to the symbols defined for Formula (7.2):

$\overline{\gamma_a}$ is the average weight density of the ground over depth z_a;

c' is the soil's effective cohesion;

Q is the vertical surcharge applied at the ground surface; and

$K_{a\gamma}$, K_{ac}, and K_{aq} are active earth pressure coefficients.

NOTE 1. Values of $K_{a\gamma}$, K_{ac}, and K_{aq} are given in Annex D.

(4) <PER> When using a total stress calculation of undrained behaviour (see 7.5.1(3)), Formula (7.4) may be used instead of (7.2) and (7.3):

$$p_a = (\overline{\gamma_a} \times z_a) - K_{ac,u}c_u + q \geq p_{a,min} \tag{7.4}$$

where, in addition to the symbols defined for Formula (7.2):

c_u is the soil's undrained shear strength;

$K_{ac,u}$ is an active earth pressure coefficient for undrained conditions.

NOTE 1. Values of $K_{ac,u}$ are given in Annex D.

(5) <RCM> A minimum value of $p_{a,min} > 0$ should be used when very large cohesion values result in no pressure being applied over a significant height of the wall.

NOTE 1. Experience suggests that such low pressures do not occur in practice.

<Drafting NOTE>A consensus on the way to assess $p_{a,min}$ has yet to be found. Further discussions needed>

7.5.4 Values of passive earth pressure

(1) <PER> For soil in a passive state, the component of the total earth pressure normal to the wall face (p_p) at a depth (z) below formation level may be calculated from Formula (7.5):

$$p_p = p'_p + \mathrm{u} \tag{7.5}$$

where, in addition to the symbols defined for Formula (7.2):

p'_p is the component of the effective passive earth pressure normal to the wall face, defined in (7.6).

(2) <PER> The component of the effective passive earth pressure normal to the wall face (p'_p) at a depth (z_p) below formation level may be calculated from Formula (7.6):

$$p'_p = K_{p\gamma}(\overline{\gamma_p} \times z_p - u) + K_{pc}c' + K_{pq}q \tag{7.6}$$

where, in addition to the symbols defined above:

$\overline{\gamma_p}$ is the average weight density of the ground over depth z_p;

$K_{p\gamma}$, K_{pc}, and K_{pq} are passive earth pressure coefficients.

NOTE 1. Values of $K_{p\gamma}$, K_{pc}, and K_{pq} are given in Annex D.

(3) <RCM> Coefficients of passive earth pressure should be cautiously assessed for high values of the friction angle (> 40°), for which no prior experience is available.

(4) <PER> When using a total stress analysis for calculation of undrained behaviour, Formula (7.7) may be used instead of (7.5):

$$p_p = (\overline{\gamma_p} \times z_p) + K_{pc,u}c_u + q \tag{7.7}$$

where, in addition to the symbols defined above:

$K_{pc,u}$ is a passive earth pressure coefficient for undrained conditions.

NOTE 1. Values of $K_{pc,u}$ are given in Annex D.

(5) <REQ> If limiting values of passive earth pressure are calculated by assuming planar failure surfaces, the ground/structure interface coefficient (tan δ) in Formula (7.1) shall be taken as 0.

(6) <RCM> Only permanent surcharges should be considered on the passive side of the excavation.

7.5.5 At-rest values of earth pressure

(1) <REQ> In the initial situation, before any movement of the wall relative to the ground takes place, the earth pressure shall be calculated from the at-rest state of stress. The determination of the at-rest state shall take account of the loading history of the ground.

NOTE 1. Installation of the wall can also influence the at rest state.

(2) <PER> For soil in an at-rest state, the total earth pressure (p_0) at a depth (z_0) below ground surface may be calculated from Formula (7.8):

$$p_0 = p'_0 + u = K_0(\overline{\gamma_0} \times z_0 - u + q) + u \tag{7.8}$$

where:

p'_0 is the effective at-rest earth pressure;

u is the groundwater pressure;

$\overline{\gamma_0}$ is the average weight density of the ground over depth z_0;

q is the vertical surcharge applied at the surface of the ground; and

K_0 is the at-rest earth pressure coefficient.

NOTE 1. Values of K_0 are given in Annex D.

7.5.6 Intermediate values of earth pressure

(1) <REQ> Intermediate values of earth pressure, between active and passive limits, shall be determined taking into account the amount of wall movement and its direction relative to the ground.

NOTE 1. Intermediate values of earth pressure occur if the wall movements are insufficient to mobilise the limiting values.

(2) <PER> The intermediate values of earth pressures acting on the wall may be calculated using empirical rules, beam on springs models, or continuum numerical models.

NOTE 1. Guidance on suitable calculation models is given in Annex D.

7.5.7 Compaction effects

(1) <REQ> The determination of earth pressures acting behind the wall shall take account of any additional pressures generated by compacting backfill, in relation with the procedures adopted for its compaction (see 7.2.5.1(3)).

NOTE 1. Guidance for assessing these additional pressures when they cannot be avoided is given in Annex D.

7.5.8 Water pressures

(1) <REQ> Assessment of the design groundwater pressure shall conform to EN 1997-1, 6.

(2) <REQ> The adverse effects of water pressures due to the presence of perched or artesian water tables shall be considered.

(3) <REQ> When they cannot be avoided, the detrimental effects of hydraulic gradients due to dewatering shall be considered when calculating water pressures and resulting effective stresses.

7.6 Ultimate limit states

7.6.1 General

(1) <REQ> The ultimate resistance of the ground shall consider drained and undrained conditions, as appropriate. <To be transferred to Part 1>

7.6.2 Overall stability

(1) <REQ> The overall stability of a retaining structure shall be verified in accordance with Clause 4.

NOTE 1. Figure 7.1 gives examples of limit modes for overall stability of retaining structures.

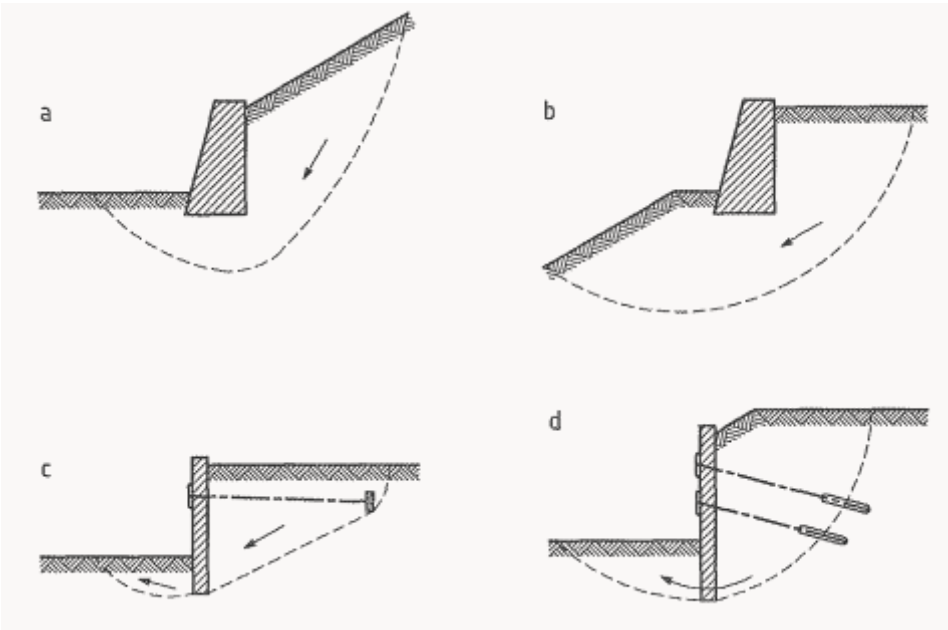

Figure 7.1 — Examples of limit modes for overall stability of retaining structures

<Drafting NOTE>Only Figures a) and d) will be kept and redrawn with circular surfaces>

(2) <REQ> The overall stability of the ground close to an excavation, including excavation spoil and existing structures, roads and services shall be checked. <To be moved to Clause 4 and replaced here with a cross-reference>

(3) <PER> For retaining structures in Geotechnical Category 1, overall stability may be verified by reference to comparable experience. <To be moved to Clause 4 and replaced here with a cross-reference>

(4) <REQ> If stabilising measures are necessary to ensure the overall stability of the site and retaining structure plays a part in those stabilising measures, then the stability of compound failure surfaces that intersect the retaining structure shall be verified.

NOTE 1. Compound failure surfaces are automatically considered when overall stability is verified in a continuum numerical model.

(5) <PER> Overall stability may be verified using either an analytical limit equilibrium model (in which partial factors are applied on soil resistance parameters along the critical failure surface only) or a continuum numerical model (in which partial factors are applied on soil resistance parameters within all the soil mass around and under the retaining structure). <To be moved to Clause 4 and replaced here with a cross-reference>

(6) <REQ> If a continuum numerical model is used for overall stability calculations, this model shall be considered as well when verifying other ultimate limit states given in 7.6.4.1 (rotational stability), 7.6.4.3 (pull out resistance), 7.6.5 (stability of excavation), and 7.6.6 (structural failure).

NOTE 1. This ensures consistency and avoids effects of ULS actions on the retaining structure from overall stability calculations being ignored when verifying other local failure mechanisms. This does not exclude that other calculation models are additionally used when checking local failure mechanisms.

(7) <RCM> If analytical models are used for overall stability and earth pressure calculations, and compound failure surfaces (intercepting the retaining structure) are not considered in the overall stability calculations, partial factors γ_M should be multiplied by a model factor γ_{Rd}.

NOTE 1. Values of γ_{Rd} are given in 7.6.7.

(8) <REQ> If a retaining structure is part of stabilizing measures required to ensure overall stability of the site, it shall be classified in Geotechnical Category 3.

7.6.3 Gravity walls

(1) <REQ> The bearing resistance of a gravity retaining structure shall be verified according to Clause 5.

NOTE 1. Figure 7.2 (b), (c), (e), and (f) give examples of mechanisms involving bearing failure beneath gravity retaining structures.

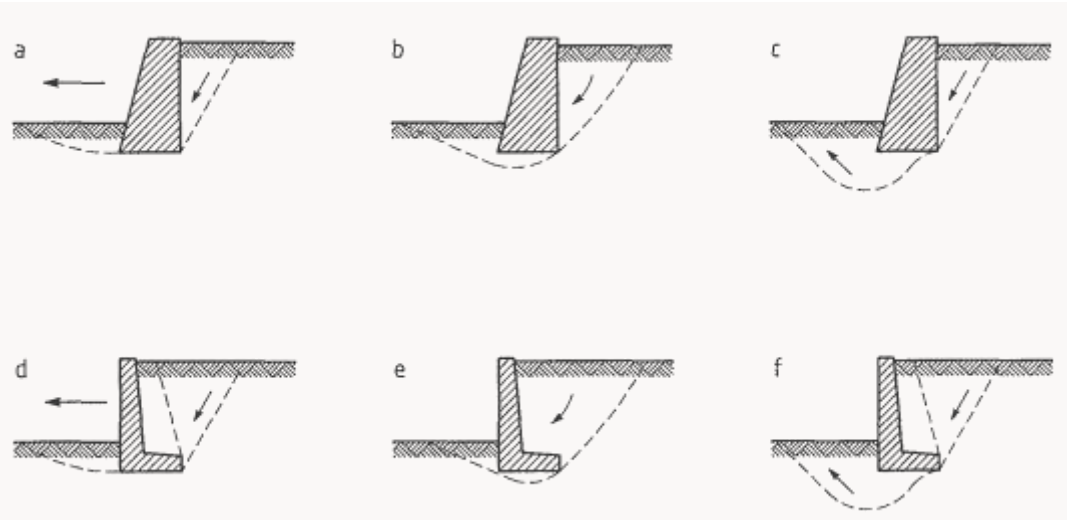

Figure 7.2 — Examples of failure mechanisms for gravity walls

(2) <REQ> The sliding resistance of a gravity retaining structure shall be verified according to Clause 5.

NOTE 1. Figure 7.2 (a) and (d) give examples of mechanisms involving sliding failure beneath gravity walls.

(3) <RCM> The sliding resistance of a gravity wall should not rely on base friction only.

NOTE 1. This is to ensure failure does not occur without warning, as required by 7.2.5.

NOTE 2. A minimum embedment or shear keys may be used to improve the sliding resistance.

7.6.4 Embedded walls

7.6.4.1 Rotational stability

(1) <PER> Resistance to loss of rotational equilibrium may be verified using analytical calculation models or continuum numerical models.

NOTE 1. Verifications consist in checking that the embedded length is sufficient to mobilize the required passive soil resistance.

NOTE 2. Figure 7.3 gives examples of mechanisms involving failure of embedded walls.

NOTE 3. Analytical calculation models include limit equilibrium methods, limit analysis, and beam-on-springs calculations.

NOTE 4. Further information about calculation models is given in Annex D.

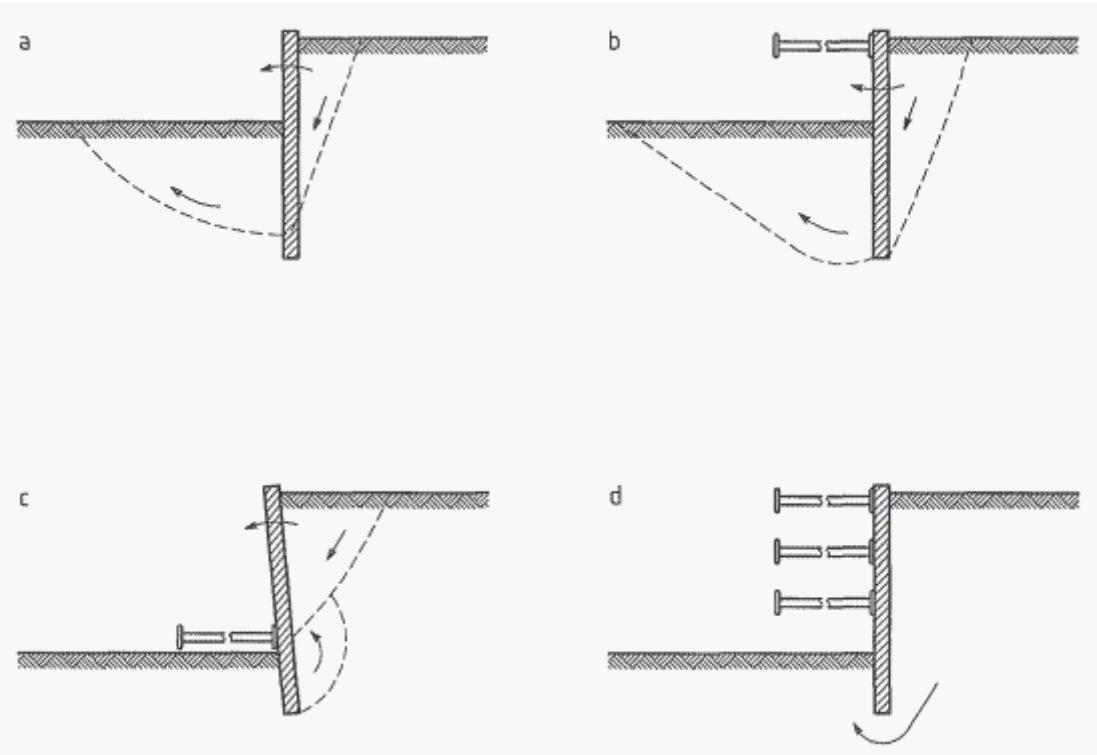

Figure 7.3 — Examples of failure mechanisms for embedded walls

(2) <PER> Resistance to loss of rotational equilibrium may be verified using either a material or resistance factor approach, based on partial factors indicated in table 7.1.

NOTE 1. Use of a material factor approach is more especially relevant when continuum numerical models have been used to check overall stability mechanisms (see 7.6.2 (6)).

NOTE 2. Use of a resistance factor approach is more especially relevant when analytical models are used and increased partial factors are considered in overall stability calculations (see 7.6.2(7)).

(3) <REQ> Effects of actions derived from ultimate limit state verifications shall be considered when checking the structural resistance of the retaining structure and associated supports, as well as the pull-out resistance of anchors.

7.6.4.2 Bearing resistance

(1) <REQ> The bearing resistance of an embedded wall that acts as the foundation for a structure, or is subject to significant imposed vertical forces shall be verified according to this Clause 7.6, and additionally by either Clause 5 or Clause 6 depending on the embedded length.

NOTE 1. As illustrated by Figure 7.4, significant vertical forces can be imposed on an embedded wall by inclined anchors.

(2) <REQ> Under the circumstances described in (1), it shall be verified that the skin friction used to ensure vertical equilibrium is consistent with vertical components of active and passive earth

pressures used to ensure horizontal equilibrium, rotational stability, and structural resistance of the retaining structure.

NOTE 1. Skin friction acting downwards on the active side of the wall or upwards on the passive side considerably change the coefficients of earth pressure in an adverse sense.

NOTE 2. Guidance is provided in 7.5.1(6) and Annex D.

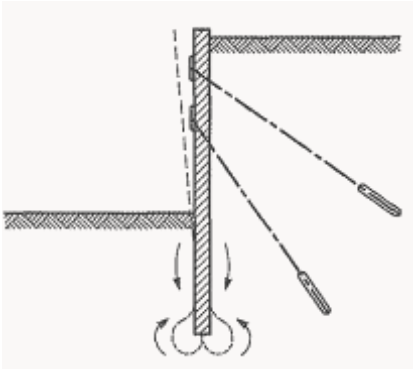

Figure 7.4 — Example of a limit mode for vertical failure of embedded walls

7.6.4.3 Ultimate geotechnical resistance of anchors

(1) <REQ> The ultimate geotechnical resistance of anchors that are used to support an embedded wall shall be verified according to Clause 8, taking into account effects of all design actions derived from limit states specified in this Clause 7.

(2) <REQ> The ultimate geotechnical resistance of anchors shall be verified taking account of every failure mechanism for which anchors act as a resisting force.

NOTE 1. Anchors could have to resist the highest reaction derived from several ULS calculations (i.e. rotational failure, structural resistance, overall stability if the retaining structure plays a part in stabilisation, etc.).

(3) <REQ> Prestressing forces shall be considered when verifying structural resistance.

NOTE 1. Traditional methods used to justify rotational failure, such as limit equilibrium methods, do not automatically take the effects of prestressing forces into account.

NOTE 2. Beam-on-springs and numerical models can generally take into account prestressing forces in the effect of actions E_d considered in 8.6.

NOTE 3. Figure 7.5 gives examples of failure mechanisms associated with anchored walls.

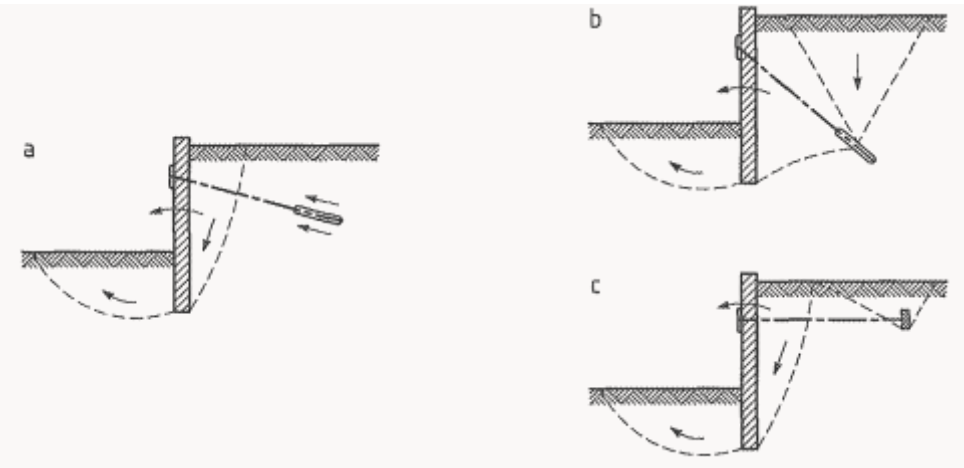

Figure 7.5 — Examples of failure mechanisms associated with anchored walls

(4) <RCM> Anchoring elements that are used to stabilize a retaining structure should not be placed so that they interfere with the active zone that acts directly on the retaining structure (see Figure 7.5(b) and (c)).

NOTE 4. Paragraphs (4)-(5) apply to anchor walls as well as to grouted anchors.

(5) <RCM> If interference cannot be avoided, additional soil pressures that act on the wall should be included in the verification of wall stability and it should be demonstrated that overall displacements that result from this interaction are acceptable.

(6) <PER> When deadman anchors are used, interaction may be neglected when the passive failure surface mobilised by anchors does not interfere with the active zone behind the retaining wall (see Fig. 7.8(c)).

(7) <REQ> Unless a calculation model that automatically accounts for interaction effects illustrated in Figure 7.5 (b) and (c) is used, both failure mechanisms (b) and (c) shall be verified explicitly.

NOTE 1. Numerical continuum models automatically take these interaction effects into account

NOTE 2. Information about calculation models suitable for analysing the limit mode illustrated in Figure 7.5(b) can be found in Annex D.

7.6.5 Stability of excavations

(1) <REQ> It shall be verified that failure by heave of the bottom of excavations due to unloading of the ground cannot occur.

NOTE 1. Overall stability calculations are generally sufficient to verify that unacceptable basal heave is not apt to occur. Guidance about suitable models is provided in Annex D.

(2) <RCM> Resistance to basal heave during excavation in fine soils should be verified assuming undrained ground conditions.

(3) <REQ> If basal heave is verified assuming undrained ground conditions, other failure mechanisms likely to affect the retaining structure shall be verified under the same assumption.

(4) <RCM> Resistance to basal heave in coarse soils should be verified taking in to account hydraulic gradients in the soil.

(5) <REQ> In the presence of hydraulic gradients, it shall be verified that failure cannot occur due to internal erosion or piping (see EN 1997-1, 8.2.4.3), hydraulic heave (see EN 1997-1, 8.2.4.2), uplift (see EN 1997-1, 8.2.3.2), or bottom failure mechanisms, i.e. basal heave (see Annex D).

(6) <RCM> Measures should be taken to avoid the adverse effects of upward hydraulic gradients.

NOTE 1. Examples of preventive measures include: deep relief wells to protect the passive zone close to embedded walls; increased embedment; embedment dowbn to impervious layers, natural (clayey) or artificial (grouting), that concentrate water head losses.

(7) <REQ> If upward hydraulic gradients cannot be avoided in the passive zone close to the retaining structure, passive earth resistance shall be reduced accordingly.

7.6.6 Structural failure

(1) <REQ> The structural resistance of retaining structures, and any supporting structural elements, shall be verified according to EN 1992 (for reinforced concrete structures), EN 1993 (for steel structures), EN 1995 (for reinforced timber structures), and EN 1996 (for masonry structures).

(2) <REQ> Structural resistance shall be verified taking account of all geotechnical failure mechanisms that interfere with the retaining structure.

7.6.7 Partial factors

7.6.7.1 Gravity walls

(1) <RCM> The ultimate ground resistance beneath a gravity retaining structure should be verified according to Clause 5.

7.6.7.2 Embedded walls

(1) <RCM> The ultimate ground resistance around an embedded retaining structure should be verified using either:

- the material factor approach, with:
  - factors γ_F applied to actions according to Formula (8.4) of EN 1990; and
  - factors γ_M applied to ground properties according to Formula (8.12); or
- the resistance factor approach, with:
  - factors γ_E applied to effects-of-actions according to Formula (8.5); and
  - factors γ_R applied to ground resistance, using Formula (8.13).

NOTE 1. Unless the National Annex gives a specific choice, the approach to be used is as specified by the relevant authority or agreed for a specific project with the relevant parties.

NOTE 2. Values of the partial factors are given in Table 7.1 (NDP) for persistent and transient design situations unless the National Annex gives different values.

Table 7.1 (NDP) – Partial factors for the verification of ground resistance against retaining structures for fundamental (persistent and transient) design situations

Verification of	Partial factor on	Symbol	Material factor approach (MFA)		Resistance factor approach (RFA)
			(a)	(b)	
Overall stability	See Clause 4[3]				
Rotational and bearing resistance of embedded walls	Actions and effects-of-actions	γ_F and γ_E	DC4[1]	DC3[1]	DC4[1]
	Ground properties	γ_M	M1[2]	M3[2]	Not factored
	Passive earth resistance	γ_{Re}	Not factored		1,4
	Bearing resistance	γ_{Rv}	Not factored		1,4
Basal heave			To be added		

[1]Values of the partial factors for Design Cases (DCs) 3 and 4 are given in EN 1990 Annex A.
[2]Values of the partial factors for Sets M1 and M3 are given in EN 1997-1 Annex A.
[3]Values of the model factor γ_{Rd} in 7.6.2(6) are 1.2 for persistent design situations and sensitive structures, 1.05 for transient design situations, and 1.0 for deep failure mechanisms that have no possibility of interfering with the retaining structure.

(2) <REQ> If the material factor approach is used, then both combinations of factors (a and b) given in Table 7.1 (NDP) shall be verified.

(3) <RCM> If the resistance factor approach is used, the partial factor γ_{Re} should be applied to the resultant passive earth resistance.

NOTE 1. When using the RFA, the partial factors γR and γE can be combined into a single factor applied to passive soil resistance.

(4) <PER> When using the resistance factor approach, explicit verification of rotational stability may be omitted for if the uppermost part of the retaining structure is supported by anchors, struts, or slabs and the ratio between the passive earth resistance and the mobilized earth pressure in front of the wall is greater or equal to $\gamma_{Re}\,\gamma_E$.

(5) <PER> Provided the conditions specified in (6) below are satisfied, the value of γ_{Re} for transient design situations may be multiplied by a factor $K_{R,tr} \leq 1{,}0$ provided that the product $K_{R,tr}\,\gamma_{Re}$ is not itself less than 1,0.

NOTE 1. For retaining structures, the value of $K_{R,tr}$ is 1.0 unless the National Annex gives a different value.

(6) <RCM> The reduction factor $K_{R,u}$ should only be applied if the conditions specified in EN 1997-1 4.4.3(10) are satisfied.

7.7 Serviceability limit states

7.7.1 General

(1) <RCM> The assessment of design values of earth pressures should take account of initial stresses in and the stiffness and strength of the ground and the stiffness of the structural elements.

7.7.2 Displacements

(1) <REQ> Limiting values of ground movement around retaining structures shall be established in accordance with EN 1997-1, 9.3, taking into account the tolerance to displacements of supported structures and services.

(2) <REQ> Estimates of ground movement around retaining structures, and their effects on supported structures and services, shall always be checked against comparable experience.

NOTE 1. Calculations of displacements are not accurate. They merely provide an approximate indication of the expected value.

NOTE 2. Calculation models for assessing ground movement can be found in Annex D.

(3) <REQ> Estimates of ground movement around retaining structures shall take into account the construction sequence.

(4) <PER> The design may be justified by checking that the estimated displacements do not exceed the limiting values.

NOTE 1. Anchor prestressing is an example of an efficient means to limit displacements.

(5) <PER> Retaining structures may be designed using the Observational Method.

NOTE 1. Guidance for the use of the Observational Method is given in 7.8.4.3.

(6) <RCM> Vibrations caused by traffic loads or construction machinery behind the retaining wall should be considered when estimating ground movements around retaining structures.

(7) <RCM> The behaviour of materials assumed in displacement calculations should be validated against comparable experience.

(8) <RCM> If linear behaviour is assumed, instead of adopting a complete stress-strain model, the stiffnesses adopted for the ground and structural materials should be appropriate for the extent of deformation computed and the loading/unloading sequence being considered (see Annex D).

7.8 Execution

7.8.1 General

(1) <REQ> The design, execution, and control of concrete gravity walls shall conform to EN 13670.

(2) <REQ> The design, execution, and control of steel sheet pile walls shall conform to EN 12063.

(3) <REQ> The design, execution, and control of diaphragm walls shall conform to EN 1538.

(4) <REQ> The design, execution, and control of soldier pile walls shall conform to EN 1536, EN 14199, or EN 12699 as appropriate.

(5) <REQ> The design, execution, and control of steel combined walls shall conform to EN 12063 and EN 12699.

NOTE 1. Feasibility of the construction needs to be ensured without conflicting with execution requirements (e.g. minimum spacing between reinforcement bars in concrete structures).

7.8.2 Execution control

<Clause not used>

7.8.3 Supervision

7.8.3.1 General items to be checked

(1) <REQ> The Inspection Plan specified in EN 1997-1, 10.1, shall include:

- verification of ground and groundwater conditions, and of the location and general layout of the new retaining structure and any adjacent settlement sensitive structure (above and below ground);
- verification of the sequence of works, and control of ground excavation levels, as well as temporarily applied loads behind the wall;
- for gravity walls, verification of the quality of foundation ground, including as necessary placement of a concrete screed or a drainage layer properly compacted;
- for gravity walls, effect of backfill compaction;
- safety of workmen with due consideration of geotechnical limit states.

(2) <REQ> If the sequence of works, or ground excavation levels are no longer consistent with design assumptions, these should be immediately revised and the design modified accordingly.

(3) <REQ> If ground or groundwater conditions are found to significantly differ from design or method assumptions, or reveal significant heterogeneities that invalidate the Geotechnical Design Model, the design shall be re-evaluated and additional investigations prescribed if necessary.

7.8.3.2 Water flow and groundwater pressures

(1) <REQ> In addition to 7.8.3.1(1), the Inspection Plan shall include:

- adequacy of systems to ensure control of groundwater pressures in all aquifers where excess pressure could affect stability of slopes or base of excavation, including artesian pressures in an aquifer beneath the excavation
- disposal of water from dewatering systems; depression of groundwater table throughout entire excavation to prevent boiling or quick conditions, piping and disturbance of formation by construction equipment
- diversion and removal or rainfall or other surface water;
- efficient and effective operation of dewatering systems throughout the entire construction period, considering encrusting of well screens, silting of wells or sumps;
- wear in pumps;

- clogging of pumps
- control of dewatering to avoid disturbance of adjoining structures or areas;
- observations of piezometric levels;
- effectiveness, operation and maintenance of water recharge systems, if installed; and
- effectiveness of sub-horizontal borehole drains.

(2) <RCM> In addition to (1), the Inspection Plan should include:

- groundwater flow and pressure regime;
- effects of dewatering operations on groundwater table;
- effectiveness of measures taken to control seepage inflow;
- internal erosion processes and piping; and
- chemical composition of groundwater; corrosion potential.

7.8.4 Monitoring

7.8.4.1 General items to be checked

(1) <REQ> The Monitoring Plan specified in EN 1997-1, 10, shall include:

- settlements at established time intervals of adjoining structures or areas, more especially in the case of compressible or poor quality soil layers;
- evolution of existing cracks in adjacent structures;
- piezometric levels under buildings or behind the structure, or in adjoining areas, especially if permanent dewatering systems are installed;
- deflection or displacement of retaining structures;
- behaviour of temporary or permanent support systems, such as anchors or struts; and
- the required degree of watertightness.

(2) <RCM> In addition to (1), the Monitoring Plan should include:

- displacements and distortions of adjacent buildings.

7.8.4.2 Geotechnical monitoring

(1) <REQ> Geotechnical monitoring shall include visual inspection and measurements of the behaviour of the retaining structure and its surroundings (through items given in 7.8.4.1) in order to check the validity of:

- the Geotechnical Design Model and other design assumptions;
- predictions of performance made during the design.

(2) <RCM> Geotechnical monitoring should also be implemented to record the actual performance of the retaining structure in order to collect databases of comparable experience.

(3) <RCM> Experience gained from geotechnical monitoring should be recorded in order to improve calculation models, and also to be used as a reference, when using the Observational Method, in situations where calculation models are not reliable enough to demonstrate that there is an acceptable probability that the actual behaviour will be within the acceptable limits (see 7.8.4.3).

(4) <REQ> All measurements provided shall be performed at established time intervals and at established execution stages, relevant for the behaviour of the retaining wall and for comparison with the estimates of the design and for any special events that might occur during the lifetime of the retaining structure, such as earthquakes, floods, impacts, or similar.

(5) <REQ> For each series of measurements, details shall be given to describe the status of the execution works or any other relevant aspects to the behaviour of the retaining structure (excavations/fills, surcharges, water levels, drainage etc.).

7.8.4.3 The Observational Method

(1) <REQ> When any of the conditions described hereafter is met, the Observational Method shall be implemented during excavation works:

- the complexity of ground conditions, specific soil behaviour, or soil structure interaction makes it difficult to predict the geotechnical behaviour accurately enough;
- sensitive environmental conditions or structural requirements result in displacements criteria lower than the accuracy of calculation models themselves;
- geotechnical monitoring does not confirm predictions of performances made during the design phase.

(2) <PER> The Observational Method may be implemented to optimise the design of the retaining structure, when geotechnical conditions are likely to be less severe than described in the Geotechnical Design Model.

(3) <REQ> When the Observational Method is used for the design of a retaining structure, the following requirements shall be met before it is started:

- acceptable limits of behaviour shall be established;
- the range of possible behaviour shall be assessed, and it will be shown that there is an acceptable probability that the acceptable behaviour will be within the acceptable limits;
- a plan of monitoring shall be devised: the critical measurements must be able to be obtained reliably, and reveal whether the actual behaviour lies within the acceptable limits. The monitoring shall make this clear at a sufficiently early stage, and with sufficiently short intervals to allow contingency actions to be undertaken successfully;
- the response time of the instruments, and the management and communications procedures for analysing the results and making appropriate decisions shall be sufficiently rapid in relation to the possible evolution of the system;
- a plan of contingency actions shall be devised, and fully developed with all necessary equipment available so that contingency actions can be implemented within acceptable timescale if the monitoring reveals behaviour outside acceptable limits;
- all project stakeholders shall be actively involved and supportive of the use of the observational method.

7.8.5 Maintenance

(1) <REQ> For permanent retaining structures, the Geotechnical Design Report shall include specifications relative to maintenance of sensitive devices, such as anchors, drains, or pumping wells.

7.9 Testing

(1) <REQ> The following shall be tested in accordance with relevant European standards: anchors; pumping wells; soil improvement efficiency if considered in the design.

(2) <RCM> The efficiency of any dewatering system should be tested before the beginning of excavation, in accordance with <EN standard???>.

7.10 Reporting

7.10.1 Ground Investigation Report

(1) <REQ>The Ground Investigation Report shall conform to EN 1997-1, 12.2.

7.10.2 Geotechnical Design Report

(1) <REQ>The Geotechnical Design Report shall conform to EN 1997-1, 12.3.

7.10.3 Geotechnical Construction Record

(1) <REQ>The Geotechnical Construction Record shall conform to EN 1997-1, 12.4.

8 Anchors

8.1 Scope

(1) <REQ> This Clause shall apply to the design of temporary and permanent anchors that transmit a tensile force from the anchor head through a free anchor length over a resisting element to a load resisting formation of soil or rock (see Figure 8.1).

NOTE 1. This includes anchors within the scope of EN 1537 and mechanical anchors (such as screw, harpoon, and expander anchors) with a free anchor length.

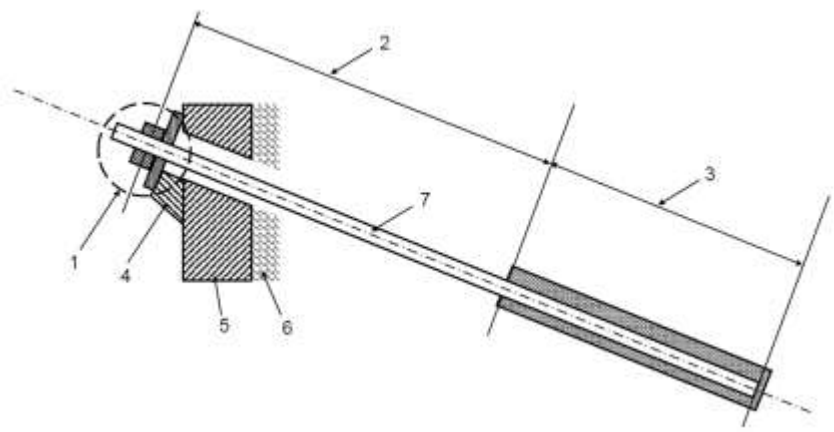

Figure 8.1 – Anchors within the scope of Clause 8

1 anchor head, 2 free anchor length, 3 resisting element (e.g. the grout body), 4 load transfer block, 5 anchored structure, 6 soil/rock, 7 tendon

(2) <REQ> Tension elements without a free length shall be designed according to Clauses 6 and 7.

NOTE 1. Tension elements without a free length include tension micropiles.

(3) <REQ> Anchor walls providing fixity for dead-man anchors shall be designed according to Clause 7.

(4) <REQ> All parts and component structures to reinforce the ground shall be designed in accordance with Clause 9.

NOTE 1. Parts and component structures to reinforce the ground itself are typically bolts, nails, sprayed concrete and wire mesh.

8.2 Basis of design

8.2.1 Design situations

(1) <REQ> Design situations shall be selected in accordance with EN 1997-1, 4.2.2.

8.2.2 Geometrical data

(1) <REQ> Values of geometrical data for anchors shall be determined according to EN 1997-1, 4.4.4.

(2) <REQ> The required free anchor length shall be determined in the design of the anchored structure.

8.2.3 Actions and environmental influences

(1) <REQ> Actions and environmental influences on retaining structures shall be determined according to EN 1997-1, 4.3.1.

(2) <REQ> Design values of the anchor force and lock off load shall be obtained from the verification of limit states for the anchored structure.

(3) <REQ> The lock-off load shall be sufficient to ensure serviceability of the structure and supporting structures.

(4) <REQ> The lock-off load shall not give rise to a limit state in the ground, in the structure, or in supporting structures.

(5) <REQ> Anchor forces required to support natural slopes, cuttings, and embankments shall be determined according to 4.5.

(6) <REQ> Anchor forces required to support retaining structures shall be determined according to 7.5.

(7) <REQ> Anchor forces required to support structures subjected to uplift shall be determined according to EN 1997-1, 8.2.3.

(8) <REQ> Design situations for anchors shall include:

- chemical components of ground or groundwater that can adversely affect the durability of the anchor or the resistance at the grout/ground interface;
- effects of corrosion (see EN 1993-5 and, for grouted anchors, EN 1537).

(9) <RCM> The effects of potentially deleterious stray currents should be investigated in accordance with EN 50162.

8.2.4 Limit states

(1) In addition to the limit states specified in EN 1997-1, 8.2, the following ultimate limit states shall be verified for all anchors:

- structural failure of the tendon or anchor head, caused by the applied force:
- failure of the interface between the tendon and the grout body;
- failure at the interface between the grout body or the resisting element in the ground;
- loss of anchor force by displacement of the resisting element due to creep;
- limit states in supported or adjacent structures, including those arising from testing and pre-stressing;
- excessive deformation of the anchored structure;
- increase of anchor load during the design service life.

(2) <RCM> Ultimate limit states other than those given in (1) should be verified as necessary.

(3) <REQ> For a group of anchors, verification shall be based on the most critical failure surface.

NOTE 1. Depending on spacing and the profile of ground strength, this can involve displacement of part of or the whole anchored ground body, often combined with pull-out of the distal ends of the anchors.

(4) <REQ> In addition to the limit states specified in EN 1997-1, 9, the following serviceability limit states shall be verified for all anchors:

- deformation of the anchored structure;
- increase of anchor load during the design service life;
- loss of anchor force by displacement of the resisting element due to creep.

(5) <RCM> Serviceability limit states other than those given in (4) should be verified as necessary.

(6) <REQ> Verification of limit states for anchors shall be done by testing.

(7) <REQ> Anchors shall only be used if their design and construction have been verified by either:

- investigation or suitability tests; or
- comparable experience.

NOTE 1. Anchors are verified by investigation and suitability tests unless the National Annex states otherwise.

NOTE 2. Comparable experience is defined in EN 1997-1, 3.1.1.17.

(8) <REQ> Acceptance tests shall be carried out on all anchors.

(9) <REQ> Investigation, suitability and acceptance tests on grouted anchors shall conform to EN ISO 22477-5.

(10) <REQ> Prior to their usage, it shall be demonstrated that the anchor components have the required performance and durability as specified by the relevant authority or for a specific project with the relevant parties.

8.2.5 Robustness

(1) <REQ> It shall be verified that adjacent structures can withstand the effects of any deformations imposed when installing and testing the anchor.

(2) <REQ> For pre-stressed anchors, the anchor head shall be designed to allow the tendon to be stressed, proof- loaded, and locked-off and (if required) released, de-stressed, and re-stressed.

(3) <REQ> The anchor head shall be designed to tolerate angular deviations of the anchor force.

(4) <REQ> The anchor head shall be designed to accommodate deformations that can occur during the design service life of the structure.

(5) <RCM> The anchor resistance should be provided by ground that is sufficiently distant from the anchored structure such that there is no interaction between that ground and the structure.

(6) <REQ> Measures shall be taken to avoid adverse interactions between anchors that are located close to each other.

NOTE 1. Details are given in Annex E.

(7) <RCM> The orientation of the anchor should normally be chosen to enable self-stressing under deformation.

(8) <REQ> If self-stressing under deformation is not possible, the adverse effects of potential failure mechanisms shall be considered.

(9) <REQ> The lock-off load shall be large enough to ensure that the anchor resistance can be mobilised without exceeding the serviceability limit state criteria of the anchored structure.

8.2.6 Ground investigation

(1) <REQ> Ground investigation for anchors shall conform to EN 1997-1, 4.1.9.2, and EN 1997-2.

(2) <REQ> The minimum number of ground profiles and their maximum plan spacing shall conform to EN 1997-2, depending on the Geotechnical Category.

(3) <RCM> The zone of ground into which tensile forces are transferred should be included in ground investigations.

(4) <RCM> The depth of the ground investigation should be sufficient to ensure that:

- the anticipated geological formation that is affected by changes in stresses induced by tensioning the anchor is confirmed;
- no underlying stratum will affect the anchor design; and
- groundwater conditions are well defined.

(5) <RCM> The ground investigation should determine the likelihood of difficulties caused by:

- potential obstructions to drilling;
- the process of borehole drilling (drillability);
- anchor borehole stability;
- flow of ground water in or out of the borehole; and
- loss of grout from the borehole.

8.2.7 Geotechnical reliability

(1) <RCM> In addition to EN 1997-1, 4.1.2.3, the features given in **Table 8.1** (NDP) should be considered when selecting the Geotechnical Complexity Class for anchors.

Table 8.1 (NDP) – Selection of Geotechnical Complexity Class for anchors

Geotechnical Complexity Class	Complexity	General features causing uncertainty
GCC 3	Higher	• fluctuating and dynamic loads if there is no comparable experience; • difficult ground conditions; • aggressive ground conditions.
GCC 2	Normal	• fluctuating and dynamic loads if there is comparable experience

GCC 1	Lower	Not applicable for anchors

8.3 Materials

(1) <REQ> Materials for anchors shall conform to EN 1993-5.

(2) <REQ> The durability of steel shall conform to EN 1993-1-1 and EN 1993-5.

(3) <REQ> Corrosion protection of anchors that have a tendon made of steel shall be designed taking into account the type of steel and the aggressiveness of the ground environment, as specified in EN 206.

(4) <REQ> For grouted anchors, corrosion protection shall be in accordance with EN 1537.

(5) <REQ> For other anchor types, corrosion protection shall be checked independently as specified by the relevant authority or agreed for a specific project with the relevant parties.

8.4 Groundwater

This clause is not used.

8.5 Geotechnical analysis

This clause is not used.

8.6 Ultimate limit states

8.6.1 General

(1) <REQ> The design value of the ultimate limit state resistance of an anchor $R_{d,ULS}$ shall satisfy Formula (8.1):

$$E_d \leq \min\left(R_{d,ULS}; R_{td}\right) \tag{8.1}$$

where:

E_d is the maximum design value of the effects of actions, including the effect of lock-off load, sufficient to prevent an ultimate or serviceability limit state in the anchored structure;

$R_{d,ULS}$ is the design value of the geotechnical resistance of the anchor at the ultimate limit state;

R_{td} is the design value of the structural resistance of the anchor at the ultimate limit state.

NOTE 1. Design Cases to be used to evaluate E_d are given in Clauses 4 and 7.

8.6.2 Geotechnical resistance

(1) <REQ> The measured value of the geotechnical resistance of a grouted anchor at the ultimate limit state shall be determined for each distinct geotechnical unit from a minimum of:

- three investigation or suitability tests, when using Test Method 1; or
- two investigation tests and three suitability tests, when using Test Method 3.

(2) <REQ> For non-grouted anchor types, the minimum number of tests shall conform to (1) unless otherwise specified by the relevant authority or agreed for a specific project with the relevant parties.

(3) <REQ> The measured value of the geotechnical resistance of an anchor at the ultimate limit state ($R_{m,ULS}$) shall be obtained from the results of anchor tests using Formula (8.2):

$$R_{m,ULS} = \min(R_m; P_P) \tag{8.2}$$

where:

R_m is the measured value of the resistance of an anchor complying with ultimate limit state criteria in the anchor test;

P_P is the proof load.

(4) <REQ> For grouted anchors, the measured value of the ultimate limit state resistance in (3) shall be the load corresponding to the creep rate:

- α_1 for Test Method 1;
- α_3 for Test Method 3.

NOTE 1. The values of α_1 and α_3 are 2 mm and 5 mm, respectively, unless the National Annex gives different values.

NOTE 2. The load relating to the physical pull-out resistance can be higher than the value of the load corresponding to afore mentioned creep rates.

(5) <REQ> If the limiting criteria of the geotechnical ultimate limit state is not reached during a test, P_p shall be taken as R_m.

(6) <REQ> For non-grouted anchor types, the limiting criteria shall be specified by the relevant authority or agreed for a specific project with the relevant parties.

(7) <REQ> The characteristic value of the geotechnical ultimate limit state resistance of an anchor $R_{k,ULS}$ shall be derived from Formula (8.3):

$$R_{k,ULS} = \frac{(R_{m,ULS})_{min}}{\xi_{ULS}} \tag{8.3}$$

where:

$(R_{m,ULS})_{min}$ is the lowest value of $R_{m,ULS}$ complying with ultimate limit state criteria measured by a number of investigation or suitability tests for each distinct geotechnical unit;

ξ_{ULS} is a correlation factor for ultimate limit state verification.

NOTE 1. The value of ξ_{ULS} is 1.0 unless the National Annex gives a different value.

(8) <REQ> The design value of the geotechnical ultimate limit state resistance of an anchor $R_{d,ULS}$ shall be derived from Formula (8.6):

$$R_{d,ULS} = \frac{R_{k,ULS}}{\gamma_{a,ULS}} \tag{8.4}$$

where:

$R_{k,ULS}$ is the characteristic value of the geotechnical ultimate limit state resistance of an anchor;

$\gamma_{a,ULS}$ is a partial factor on the geotechnical ultimate limit state resistance of an anchor.

NOTE 1. The value of $\gamma_{a,ULS}$ is given in Table 8.2 unless the National Annex gives a different value.

8.6.3 Structural resistance

(1) <REQ> The design value of the ultimate limit state resistance of the structural elements of an anchor (R_{td}) shall be calculated according to EN 1992 and EN 1993, as relevant, and satisfy Formula (8.5):

$$E_d \leq R_{td} \tag{8.5}$$

where:

E_d is the maximum design value of the effects of actions, including the effect of lock off load, sufficient to prevent an ultimate or serviceability limit state in the supported structure;

R_{td} is the design value of the resistance of the anchor's structural element at the ultimate limit state.

NOTE 1. Design Cases to be used to evaluate E_d are given in Clauses 4 and 7.

(2) <REQ> The structural design of steel tendons under a proof load shall comply with EN ISO 22477-5.

8.6.4 Partial factors

(1) <RCM> The ultimate geotechnical resistance of an anchor at the ultimate limit state should be verified using the resistance factor approach (RFA), with factors γ_R applied to ground resistance, using Formula (8.13) of EN 1990.

NOTE 1. The value of γ_R is given in Table 8.2 (NDP) unless the National Annex gives a different value.

Table 8.2 (NDP) – Partial factors for the verification of geotechnical resistance of anchors for fundamental (persistent and transient) design situations

Verification of	Partial factor on	Symbol	Resistance factor approach (RFA)	
			Test Method 1	Test Method 3
Geotechnical resistance of an anchor	Geotechnical resistance at the ultimate limit state	$\gamma_{a,ULS}$	1,1[a,b]	1,1[a]

[a]See Formula 8.4 [b]See Formulae 8.11(a) and 8.12(a)

8.7 Serviceability limit states

8.7.1 General

(1) <PER> If the ultimate limit state resistance of a grouted anchor is determined using Test Method 1, serviceability limit states are implicitly verified and so explicit verification may be omitted.

(2) <RCM> If the ultimate limit state resistance of a grouted anchor is determined using Test Method 3, then the anchor's geotechnical serviceability limit state resistance should be verified in Suitability and Acceptance Tests against the critical creep load P_c determined in a previous Investigation Test.

(3) <REQ> If an explicit verification of the geotechnical serviceability limit state of an anchor is required, then the design value of the anchor load (including lock-off load) that is sufficient to prevent a serviceability limit state in the supported structure ($F_{d,SLS}$) shall ve determined from Formula (8.6):

$$F_{d,SLS} = \gamma_{F,SLS} \cdot F_{k,SLS} \tag{8.6}$$

where:

$F_{k,SLS}$ is the characteristic value of the anchor load (including lock-off load) sufficient to prevent a serviceability limit state in the supported structure;

$\gamma_{F,SLS}$ is a partial factor on the anchor load at the serviceability limit state in the supported structure.

NOTE 1. The value of $\gamma_{F,SLS}$ is 1,0.

(4) <REQ> If explicit verification of the geotechnical serviceability limit state of an anchor is required, the design resistance ($R_{d,SLS}$) of the anchor shall satisfy Formula (8.7):

$$F_{d,SLS} \leq R_{d,SLS} \tag{8.7}$$

where:

$F_{k,SLS}$ is the maximum design value of the anchor load including the effect of lock off load sufficient to prevent any serviceability limit state in the supported structure

$R_{d,SLS}$ is the design value of the resistance of an anchor complying with SLS criteria.

8.7.2 Geotechnical resistance

(1) <REQ> If Test Method 3 is used then the measured serviceability limit state resistance R_m of anchors shall be determined from a minimum of two investigation tests.

(2) <REQ> The measured geotechnical serviceability limit state resistance of an anchor ($R_{m,SLS}$) shall be derived from Formula (8.8):

$$R_{\mathrm{m,SLS}} = \min(R_{\mathrm{m}}(\alpha_3); P_{\mathrm{C}}; P_{\mathrm{P}}) \tag{8.8}$$

where:

$R_{\mathrm{m}}(\alpha_3)$ is the measured value of the resistance of an anchor at the serviceability limit state that complies with the criteria given in Table 8.4 (NDP);

P_{P} is the proof load;

P_{C} is the load corresponding to P_{e} in Test Method 3 of EN ISO 22475-5.

(3) <REQ> The characteristic value of the geotechnical resistance of an anchor at the serviceability limit state ($R_{\mathrm{k,SLS}}$) shall be derived from Formula (8.9):

$$R_{\mathrm{k,SLS}} = \left(R_{\mathrm{m,SLS}}\right)_{\min} \tag{8.9}$$

where:

$(R_{\mathrm{m,SLS}})_{\min}$ is the lowest value of $R_{\mathrm{m,SLS}}$ complying with serviceability limit state criteria measured in a number of tests in each distinct geotechnical unit.

(4) <REQ> The design value of the geotechnical resistance of an anchor at the serviceability limit state ($R_{\mathrm{d,SLS}}$) shall be derived from equation (8.10):

$$R_{\mathrm{d,SLS}} = \frac{R_{\mathrm{k,SLS}}}{\gamma_{\mathrm{a,SLS}}} \tag{8.10}$$

where:

$R_{\mathrm{k,SLS}}$ is the characteristic value of the serviceability resistance of the anchor at the serviceability limit state;

$\gamma_{\mathrm{a,SLS}}$ is a partial factor.

NOTE 1. The value of $\gamma_{\mathrm{a,SLS}}$ is given in **Table 8.2** (NDP) unless the National Annex gives a different value.

8.7.3 Partial factors

(1) <RCM> The geotechnical resistance of an anchor at the serviceability limit state should be verified using the resistance factor approach (RFA), with factors γ_{R} applied to ground resistance, using Formula (8.13) of EN 1990.

NOTE 1. The value of γ_{R} is given in **Table 8.3** (NDP) unless the National Annex gives a different value.

Table 8.3 (NDP) – Partial factors for the verification of geotechnical resistance of anchors at the serviceability limit state

Verification of	Partial factor on	Symbol	Resistance factor approach (RFA)	
			Test Method 1	Test Method 3

Geotechnical resistance of an anchor	Resistance of a permanent anchor at the serviceability limit state	$\gamma_{a,SLS}$	Not used	1.2[a]
	Resistance of a temporary anchor at the serviceability limit state			1.1[a]
Suitability and Acceptance Tests	Resistance of a permanent anchor at the serviceability limit state	$\gamma_{a,SLS,test}$		1.25[b]
	Resistance of a temporary anchor at the serviceability limit state			1.15[b]
[a]See Formulae 8.10 [b]See Formulae 8.11(b) and 8.12(b)				

8.8 Execution

8.8.1 General

(1) <REQ> Execution of grouted anchors shall conform to EN 1537.

(2) <REQ> Execution of non-grouted anchors shall be as specified by the relevant authority or agreed for a specific project with the relevant parties. The specifications shall be given in the Geotechnical Design Report.

8.8.2 Supervision

(1) <RCM> Supervision of the installation and testing of anchors should conform to EN 1997-1, 10.2, and EN 1537.

8.8.3 Monitoring

(1) <RCM> Monitoring of anchors should conform to EN 1997-1, 10.4, and EN 1537.

8.8.4 Maintenance

(1) <RCM> Maintenance of anchors should conform to EN 1997-1, 10.5, and EN 1537.

8.9 Testing

8.9.1 General

(1) <REQ> Testing of grouted anchors shall conform to one of the test methods given in EN ISO 22477-5.

NOTE 1. Unless the National Annex gives a specific choice, the Test Method to be used is as specified by the relevant authority or agreed for a specific project with the relevant parties.

NOTE 2. Limiting values for creep at the proof load in investigation, suitability and acceptance tests are given in Table 8.4 (NDP).

Table 8.4 (NDP) – Limiting criteria for investigation, suitability and acceptance tests at the ultimate and serviceability states

Test method	Parameter	Anchor type	Investigation test	Suitability test		Acceptance test	
			α_{ULS}	α_{ULS}	α_{SLS}	α_{ULS}	α_{SLS}
				(8.11a)	(8.11b)	(8.12a)	(8.12b)
1	α_1	All	2 mm	2 mm	Not used	2 mm	Not used
3	α_3	Temporary	5 mm	Not used	1,2 mm	Not used	2,5 mm
		Permanent			1,0 mm		1,5 mm

(2) <RCM> Testing of non-grouted anchors should be carried out in accordance with EN 22477-5, unless specified otherwise by the relevant authority or agreed for a specific project with the relevant parties.

8.9.2 Investigation tests

(1) <RCM> The proof load in investigation tests should be estimated from the expected geotechnical resistance of the anchor at the ultimate limit state.

(2) <RCM> Grouted anchors with tendon bond lengths spaced less than 1,5 m centre to centre should be tested in groups unless comparable experience has shown that the interaction has no quantifiable adverse effects.

(3) <REQ> Anchors for investigation tests shall comply with EN ISO 22477-5.

8.9.3 Suitability tests

(1) <REQ> Suitability tests shall be used to verify that specified criteria are not exceeded at a proof load, P_P, derived from Formula (8.11a) for Test Method 1 or (8.11.b) for Test Method 1:

$$P_P \geq \xi_{a,ULS,test} \cdot \gamma_{a,ULS} \cdot E_d \quad (8.11a)$$

$$P_P \geq \xi_{a,SLS,test} \cdot \gamma_{a,SLS,test} \cdot F_{k,SLS} \quad (8.11b)$$

where:

E_d is the maximum design value of the effects of actions (including lock-off load) sufficient to prevent an ultimate or serviceability limit state in the supported structure;

$F_{k,SLS}$ is the characteristic value of the anchor load at the serviceability limit state;

$\gamma_{a,ULS}$ is a partial factor on the anchor's ultimate limit state resistance;

$\gamma_{a,SLS,test}$ is a partial factor on the anchor's serviceability limit state resistance;

$\xi_{a,ULS,test}$, $\xi_{a,SLS,test}$ are correlation factors.

NOTE 1. The values of $\xi_{a,ULS,est}$ and $\xi_{a,SLS,est}$ are 1,0 unless the National Annex gives different values.

NOTE 2. The values of $\gamma_{a,ULS}$ and $\gamma_{a,SLS,test}$ are given in Table 8.2 (NDP) and Table 8.3 (NDP) unless the National Annex gives different values.

NOTE 3. Limit values for creep at the proof load in suitability tests are given in Table 8.4 (NDP) unless the National Annex gives different values.

(2) <RCM> Grouted anchors with tendon bond lengths spaced at less than 1,5 m centre to centre should be tested in groups unless comparable experience has shown that the interaction has no quantifiable adverse effects.

(3) <PER> Anchors for suitability tests shall comply with EN ISO 22477-5.

(4) <REQ> The apparent tendon free length of a grouted anchor shall comply with EN 1537.

8.9.4 Acceptance tests

(1) <REQ> Acceptance tests on all anchors shall be carried out prior to their lock off and before they become operational.

(2) <REQ> Acceptance tests shall be used to verify that specified limiting criteria are not exceeded at the proof load, P_P, given by Formulae (8.12a) for Test Method 1 or (8.12b) for Test Method 3:

$$P_P = \gamma_{a,ULS} \cdot E_d \tag{8.12a}$$

$$P_P = \gamma_{a,SLS,test} \cdot F_{k,SLS} \tag{8.12b}$$

where:

E_d is the maximum design value of the effects of actions (including lock-off load) sufficient to prevent an ultimate or serviceability limit state in the supported structure;

$F_{k,SLS}$ is the characteristic value of the anchor load at the serviceability limit state;

$\gamma_{a,ULS}$ is a partial factor on the anchor's ultimate limit state resistance;

$\gamma_{a,SLS,test}$ is a partial factor on the anchor's serviceability limit state resistance.

NOTE 1. The values of $\gamma_{a,ULS}$ and $\gamma_{a,SLS,test}$ are given in Table 8.2 (NDP) and Table 8.3 (NDP) unless the National Annex gives different values.

NOTE 2. Limit values for creep at the proof load in suitability tests are given in Table 8.4 (NDP) unless the National Annex gives different values.

(3) <REQ> The apparent tendon free length of a grouted anchor shall comply with EN 1537.

(4) <RCM> For grouted anchors, where tendon bond lengths of a group of anchors cross at spacings less than 1,5 m (centre to centre), the pre-stress should be checked on selected anchors after completion of the lock-off process.

8.10 Reporting

(1) <REQ> For grouted anchors, reporting shall conform to EN 1537 and EN ISO 22477-5.

(2) For non-grouted anchors, reporting shall be as specified by the relevant authority or agreed for a specific project with the relevant parties.

9 Reinforced ground

9.1 Scope

(1) <REQ> This Clause shall apply to the design of structures of reinforced soil and reinforced rock.

NOTE 1. Reinforced soil structures include: reinforced fill structures (slopes, walls, and bridge abutments), soil nailed structures, basal reinforcement for embankments and veneer reinforcement.

NOTE 2. The design of reinforced road pavements is not covered by this Standard.

9.2 Basis of design

9.2.1 Design situations

(1) <REQ> Design situations shall be selected in accordance with EN 1997-1, 4.2.2.

(2) <REQ> If the reinforced soil structure acts as a retaining structure, the design situations shall also include those in 7.2.1.

(3) <REQ> When water is present either within, above, or adjacent to the reinforced soil structure, design situations shall include:

- rapid draw-down following a rise in level of the water table, river or sea level, causing a difference in water level inside and outside the face structure as water levels fall;
- soil saturation of the structure by excessive external water infiltration;
- any other detrimental effect on stability due to water action.

(4) <RCM> Assumed water levels within and adjacent to the reinforced soil structure should account for the proposed drainage system and its designed discharge capacity during the structure's design service life.

(5) <RCM> The adverse effects of construction loads during execution should be considered.

(6) <REQ> The ability of the ground to stand unsupported during execution of the reinforced soil structure shall be verified.

9.2.2 Geometrical data

9.2.2.1 General

(1) <REQ> Values of geometrical data for reinforced soil structures shall be determined according to EN 1997-1, 4.4.4.

(2) <RCM> The adverse effect of the inherent deformations of reinforced soil structures should be considered when those structures are combined with, or are adjacent to, other structures.

9.2.2.2 Ground surfaces

(1) <REQ> Design values for the geometry of the retained material shall take account of the variation in the actual field values. The design values shall also take account of anticipated excavation or possible scour in front of the retaining reinforced soil structure.

NOTE 1. Anticipated excavation is post construction excavation in front of the structure, which can be anticipated due to e.g. buried services maintenance.

(2) <REQ> The design inclination of the front face of a reinforced soil structure shall account for deformation of the structure that could occur during its execution and service life.

(3) <PER> The front face of a reinforced soil structure may be vertical, stepped, inclined, or a combination of those.

9.2.2.3 Reinforcing elements

(1) <REQ> Allowable construction tolerances of reinforcing elements locations shall be taken into account in the dimensioning the structure.

(2) <REQ> The vertical spacing of reinforcing elements in reinforced fill structures shall be a multiple of the compaction layer thickness of the fill material.

(3) <REQ> The vertical spacing of reinforcing elements in soil nailed structures shall conform to the excavation step depth.

(4) <REQ> The vertical spacing of reinforcing elements shall conform to the facing element requirements.

(5) <PER> The length and spacing of reinforcing elements may differ throughout the structure.

9.2.2.4 Water levels

<Drafting NOTE>It is proposed that (1)-(3) below are moved to Part 1</NOTE>

(1) <REQ> The positions of free water and phreatic surfaces shall be selected from data for the hydraulic and hydrogeological conditions at the site.

(2) <REQ> The adverse effects of spatial variation in permeability on the groundwater regime shall be considered.

(3) <REQ> The adverse effects of water pressures due to the presence of perched or artesian water tables shall be considered.

(4) <RCM> For reinforced soil structures comprising fill that is not free-draining, the design water level should take account of higher water levels in embankments due to infiltration.

9.2.3 Actions and environmental influences

9.2.3.1 General

(1) <REQ> Actions and environmental influences on reinforced soil structures shall be determined according to EN 1997-1, 4.3.1.

9.2.3.2 Surcharges

(1) <REQ> Values of surcharges shall take account of the presence of loads that act on or near the surface of the retained ground.

(2) <REQ> Variable actions arising from traffic loads acting on reinforced soil structures shall be modelled as uniform distributed loads.

<Drafting NOTE: the following NOTE has been added as a placeholder until prEN 1991-2 is available for review by SC7. This NOTE will be updated as appropriate following that review</NOTE>

NOTE 1. The value of the uniform distributed load varies from 10 to 20 kPa depending on road category. For national railways the value of the uniform distributed load, over an area occupied by the tracks, is 50 kPa and for metros/tramway/light railways is 30 kPa.

(3) <REQ> The design situation shall include any load that acts on or near the surface of the retained ground within the zone of influence of the reinforced soil structure.

NOTE 1. The zone of influence for surcharges typically extends from the reinforced soil structure face to a distance of about three times the structure height.

NOTE 2. Reinforced soil structures are affected by repeated surcharge loadings if they are close to their source. See 9.6.6.2(2) for details how to consider such effects.

9.2.3.3 Seepage forces

(1) <REQ> Seepage forces due to different groundwater levels behind and in front of a reinforced soil retaining structure shall be considered as actions.

9.2.3.4 Impact forces

(1) <PER> Design values of collision impact forces may take account of the energy absorbed by the colliding mass and by the retaining system.

NOTE 1. Impact forces can be caused by, for example, waves, ice floes, or traffic. See EN 1991-1-7.

(2) <PER> In accidental design situations in which lateral loads are applied to reinforced soil retaining structures through vehicle barriers, the increased stiffness and strength exhibited by the retained ground may be considered or the increased strength of geosynthetic reinforcing element may be assumed.

9.2.3.5 Temperature effects

(1) <REQ> The effects of temperature on geosynthetic reinforcing elements shall be considered during the design strength determination

NOTE 1. See Annex F for further details.

NOTE 2. Equivalent constant, in-soil temperatures are an important feature in the definition of the long-term design strength of geosynthetic soil reinforcement.

(2) <RCM> Measures should be taken to avoid the formation of potential ice lenses in the ground near the surface of reinforced ground.

NOTE 1. Possible measures include selection of suitable backfill material, drainage, or insulation.

9.2.4 Limit states

(1) <REQ> In addition to the limit states specified in EN 1997-1, 8.2.1, the following ultimate limit states shall be verified for all types of reinforced ground structures:

- rupture of the reinforcing element;
- failure of any connection between a reinforcing element and the facing of the structure or between the reinforcing elements themselves;
- failure along slip surfaces that pass wholly or partially through the reinforced ground block;
- pull-out of the reinforcing element from the ground beyond the assumed slip surface;
- failure by sliding between the ground and reinforcing element;
- failure by sliding between the reinforced ground block and its foundation;
- structural failure of any facing;
- failure of the connection between facing elements;
- excessive bulging and deformation of the face;
- bearing resistance of the foundation;
- squeezing of weak foundation soils;
- failure by internal erosion and piping;
- excessive settlement;
- excessive movement of the reinforced ground structure that causes collapse or affects the appearance or efficient use of the structure or nearby structures or services that rely on it;
- <typical general rock failures to be added by PT>
- <typical failures related to interfaces and discontinuities to be added by PT>

(2) <RCM> Ultimate limit states other than those given in (1) should be verified as necessary.

(3) <REQ> In addition to the limit states specified in EN 1997-1, 9, the following serviceability limit states shall be verified for all types of reinforced ground structures:

- elongation of the reinforcing elements;
- post-construction elongation of the reinforcing element;
- deformations of the reinforced ground structure itself;
- post construction deformation of the reinforced ground structure;
- differential settlement along the facing due to subsoil deformation;
- differential movement between facing and reinforced ground;
- movement of the reinforced ground structure, which may cause serviceability limit states of nearby structures or services that rely on it;
- bulging and deformation of the face;
- cracking or spalling of precast facing panels (differential settlement or movement);
- <typical general rock failures to be added by PT>

(4) <RCM> Serviceability limit states other than those given in (3) should be verified as necessary.

9.2.5 Robustness

9.2.5.1 General

(1) <REQ> Reinforced ground structures shall be designed so that they are not susceptible to sudden collapse.

(2) <RCM> Reinforced ground structures should be designed so that the approach of a limit state can be anticipated by non-intrusive means.

NOTE 1. Non-intrusive means include, for example, deformation monitoring.

(3) <RCM> Sensitivity of nearby structures to displacements induced by the reinforced ground structure itself or by the excavation for its creation within the structure's zone of influence should be systematically investigated.

NOTE 1. Although collapse of the structure might not be imminent, the degree of damage can considerably exceed a serviceability limit state in the nearby structure.

(4) <RCM> The design of reinforced ground structures should take account of the following:

- effects of constructing the structure (temporary works), including:
  - the influence of temporary works on the design of the permanent structure;
  - the changes of in situ stresses and resulting ground movements caused by the structure construction;
  - provision of access for construction;
- the practicability of forming soil nails in the adjacent ground;
- the ductility of structural components;
- access for maintenance of the structure and any associated drainage measures;
- the appearance and durability of the structure and its structural elements;
- for fill, the nature of materials available and the means used to compact them within the structure.

9.2.5.2 Drainage systems

(1) <REQ> The consequences of drainage system failure that the reinforced ground structure relies upon shall be considered.

(2) <REQ> One or both of the following measures shall be taken to ensure the reliability of the drainage system:

- a maintenance programme for the drainage system shall be specified and the design shall allow access for this purpose;
- it shall be demonstrated both by comparable experience and by assessment of any water discharge, that the drainage system will operate adequately without maintenance.

(3) <REQ> The design of the drainage system shall take into account the quantity and pressure of any discharge.

(4) <RCM> The design of the drainage system should also take into account chemical content of any discharge.

9.2.6 Ground investigation

(1) <REQ> Ground investigation for reinforced ground shall conform to EN 1997-1, 4.1.9.2, and EN 1997-2.

(2) <REQ> The minimum number of ground profiles and their maximum plan spacing shall conform to EN 1997-2, depending on the Geotechnical Category.

(3) <RCM> The depth of ground investigation should cover the zone of influence of the structure.

NOTE 1. See Annex E for further details. <Sketch to be added to Annex>

(4) <REQ> Relevant mechanical and physical properties (strength and stiffness parameters, weight density, particle grading, hydraulic conductivity, water content, and degree of saturation) of the ground shall be determined according to EN 1997-2.

(5) <REQ> The chemistry of ground and groundwater shall be determined for durability assessment of reinforcing elements to be used.

(6) <RCM> At least following chemical properties of ground and groundwater should be considered for durability assessment of reinforcing elements and if relevant for facing elements: soil resistivity, pH, chloride, sulphate, sulphide and organic contents.

(7) <RCM> The ability of the ground to stand unsupported during execution of the reinforced soil structure should be assessed.

9.2.7 Geotechnical reliability

(1) <RCM> In addition to EN 1997-1, 4.1.2.3, the features given in Table 9.1 (NDP) should be considered when selecting the Geotechnical Complexity Class for retaining structures.

Table 9.1 (NDP) – Selection of Geotechnical Complexity Class for reinforced ground structures

Geotechnical Complexity Class	Complexity	Examples of general features causing uncertainty
GCC 3	Higher	Considerable uncertainty regarding any of the following: • ground with weak[a] layers • ground with persistent movement • areas of probably site instability Further examples with high[a] complexity: • High sensibility of adjacent structures • Complex interaction with adjacent structures • Poor reliability of the calculation models when applied to particular soils (e.g. weathered rock) • Complex geometry of the structure itself
GCC 2	Normal	GCC2 should be selected if GCC1 and GCC3 are not applicable.
GCC 1	Lower	Negligible risk of the occurrence of an ultimate or serviceability limit state The following conditions apply for reinforced ground structures: • ground conditions which are simple and the properties of which are known from comparable experience • negligible[a] risk of ground movements • low excavation below the groundwater level or such excavation is straightforward[a] • low height vertical or steep slope structures (< 3 m)
[a]the terms 'weak', 'high', 'low', 'negligible', and 'straightforward' are relative to any comparable experience that exists for the particular design situation		

9.3 Materials

9.3.1 Ground properties

(1) <RCM> The choice between peak, residual, and constant volume values of shear resistance for reinforced fill materials should be based on the displacements anticipated for the design situation and the limit state being considered.

9.3.2 Fill reinforcement

9.3.2.1 Geosynthetics

(1) <REQ> All geosynthetic reinforcing elements shall conform to EN 13251.

(2) <REQ> The ultimate short-term strength of geosynthetic reinforcement shall be determined in accordance with EN ISO 10319.

(3) <REQ> The long-term design strength of geosynthetic reinforcement shall be determined from Formula (9.1).

(4) <REQ> Reinforcing elements that are formed from both metallic and polymeric geosynthetics shall be assessed for their durability in the environment in which they are being placed.

9.3.2.2 Steel

(1) <REQ> Reinforcement in the form of strips, bars, or rods shall comply with EN 10025-2, EN 10025-4, or EN10080. <Drafting NOTE: terminology for steel reinforcing elements will be checked and eventually amended to comply with EN 10079>

(2) <REQ> Reinforcement in the form of welded wire ladders or meshes shall comply with EN 10218-2 or EN 10080.

(3) <REQ> Reinforcement in the form of polymer coated woven wire mesh shall comply with EN 10218-2 and EN 10223-3.

(4) <REQ> Galvanizing to steel strips, rods, bars, ladders, and welded wire meshes shall conform to EN ISO 1461 with a minimum local coating thickness of 70 µm (minimum local coating unit weight of 505 g/m^2).

(5) <REQ> Where steel welded wire meshes are treated with a zinc-aluminium alloy coating (Zn95Al5 or Zn90Al10) conforming to EN 10244-2, the minimum coating unit weight shall conform to Table 2 of EN 10244-2.

(6) <REQ> PVC or PE coated steel woven wire meshes shall be treated with a zinc-aluminium alloy coating (Zn95Al5 or Zn90Al10) conforming to EN 10244-2, the minimum coating unit weight shall conform to Table 2 of EN 10244-2 and be further protected by a PVC or PE coating at least 0.5 mm thick conforming to EN 10245-2 or EN 10245-3.

(7) <RCM> Stainless steel or aluminium alloys should only be used for soil reinforcement in permanent structures if specific studies regarding suitability and durability have been carried out.

9.3.3 Bolt structures and nails

9.3.3.1 Metallic elements

(1) <REQ> Metallic reinforcement shall have an elongation of at least 5 % at failure.

(2) <REQ> Solid steel bars, used as reinforcing elements, shall conform to EN 10080.

(3) <REQ> Hollow steel bars, used as reinforcing elements, shall conform to EN 10210 (all parts) or EN 10219 (all parts).

(4) <REQ> Hot rolled steel products, used as reinforcing elements, shall conform to EN 10025-2.

(5) <REQ> Pre-stressed steel products, used as reinforcing elements, shall conform to EN 10138 (all parts).

(6) <REQ> If a steel reinforcing element is galvanised, the hot dip galvanised coating shall conform to EN ISO 1461 with a minimum local coating thickness of 70 µm (minimum local coating unit weight of 505 g/m²).

(7) <REQ> The corrosion protection of the coupler shall be compatible with the protection of the reinforcing element.

(8) <REQ> The corrosion protection of high strength steel and pre-stressing steel shall be in accordance with EN 1537.

(9) <PER> The steel may be classified as high-strength steel if its characteristic yield strength f_{yk} is greater than 600 MPa.

9.3.3.2 Non-metallic elements

(1) <PER> Materials other than steel may be used as a soil nail reinforcing element provided they exhibit ductile behaviour and satisfy the design requirements.

9.3.4 Grout

(1) <REQ> Grout shall conform to EN 14490.

9.3.5 Facing elements and surface reinforcements

9.3.5.1 Panels and concrete facing elements

(1) <REQ> Concrete facing panels shall conform to EN 206; concrete facing blocks shall conform to EN 771-3.

(2) <REQ> Facing elements made of the same material as the soil reinforcing elements shall conform to the same standard, as defined in 9.3.2. <Drafting NOTE: PT5 to check cross-reference>

9.3.5.2 Sprayed concrete

(1) <REQ> Sprayed concrete shall conform to EN 14487-1.

9.3.5.3 Wire mesh

<Drafting NOTE>Text to be added by PT6</NOTE>

9.4 Groundwater

(1) <REQ> Reinforced soil structure design shall be based on the groundwater conditions that apply in the ground after execution and during the design service life of the structure.

(2) <REQ> Assessment of the design groundwater pressure shall conform to EN 1997-1, 6.

(3) <REQ> The exposure classes for concrete or chemical environment for other materials in contact with groundwater shall be determined from and conform to EN 206, EN 1992-1-1, or EN 1993-1-1, as appropriate.

9.5 Geotechnical analysis

9.5.1 General

(1) <REQ> The external and compound stability of a reinforced ground structure during the design service life of the structure shall be analysed according to Clauses 4 or 7, as appropriate, with the beneficial effect of reinforcing elements included.

(2) <REQ> Horizontal and vertical deformations of a reinforced ground structure shall be analysed according to Clauses 4 or 7, as appropriate.

(3) <REQ> When introducing horizontal and vertical forces from reinforcing elements into slope stability calculations, vertical, horizontal, and moment equilibrium shall all be verified.

(4) <REQ> Structures founded on or comprised of low permeability soils shall be analysed under both drained and undrained conditions.

(5) <RCM> Undrained conditions should be analyzed using both total stress analysis (together with undrained parameters) and effective stress analysis (with drained parameters and excess groundwater pressures).

(6) <REQ> Where the origin and properties of fill are unknown during detailed design, any assumptions that are made regarding fill properties shall be stated in the Geotechnical Design Report.

(7) <RCM> When the design of a reinforced ground structure is based on a slope stability calculation in accordance with Clause 4, the shape of the assumed failure surface should not be constrained.

9.5.2 Reinforced fill structures

(1) <RCM> The internal stability of reinforced fill structures should be analyzed using one or more of the following methods:

- coherent gravity method;
- tie-back wedge method;
- two-part wedge method;
- slope stability method;
- numerical methods.

NOTE 1. Details of these methods are given in Annex F.3.

(2) <PER> Reinforced fill structures may be analyzed using a method not given in (1) provided it has been calibrated and validated against comparable experience.

(3) <REQ> If the structure analysis is done by a numerical method, then the software used shall be calibrated and validated against comparable experience.

9.5.3 Soil nailed structures

(1) <RCM> Soil nailed structures should be analysed using one or more of the following methods:

- two-part wedge method;
- slope stability method;
- numerical methods.

NOTE 1. Details of these methods are given in Annex F.3.

(2) <PER> Soil nailed structures may be analyzed using a method not given in (1) provided it has been calibrated and validated against comparable experience.

(3) <REQ> If the structure analysis is done by a numerical method, then the software used shall be calibrated and validated against comparable experience.

9.5.4 Bolt structures

(1) <RCM> Bolt structures should be analysed using one or more of the following methods:

- <Drafting NOTE>list to be added by PT6</Drafting NOTE>

(2) <REQ> Bolt structures shall be verified on its capacity both during construction and installation as in its final state.

(3) <REQ> The installation direction of a bolt structure and the loading directions on it shall be addressed appropriately in the geotechnical analysis.

(4) <PER> Pre-stressing of bolt structures may be used.

(5) <REQ> In case of pre-stressing of a bolt structure its influence both on the bolt structure itself as on the ground shall be addressed.

9.5.5 Embankment bases

(1) <REQ> Overall stability of the embankment shall be analysed according to clause 4, including the beneficial effect of reinforcing elements.

(2) <REQ> When analysing possible excessive deformation on embankment edges, resistance to extrusion shall be verified.

(3) <REQ> Resistance to horizontal sliding over the basal reinforcement shall be verified.

NOTE 1. Details of these checks are given in Annex F.4.

(4) <REQ> Temporary haulage roads over low strength fine soil with basal reinforcement shall be analysed for their ability to carry the traffic loads using the approach on an equivalent low height embankment according to (1)-(3).

(5) <REQ> If the height of the embankment prevents uniform distribution of axle loads above the reinforcing element, local bearing resistance shall be verified according to Clause 5.

9.5.6 Piled embankments (embankments over rigid inclusions)

(1) <REQ> Rigid inclusions itself shall be designed according to Clause 6.

(2) <PER> Load transfer platforms may be used over rigid inclusions to allow bigger spacing and limit differential deformation on embankment surface.

(3) <REQ> When analysing embankment edges outside the piled zone, analyses according to 9.5.4 shall be performed.

(4) <RCM> The load distribution from an embankment through the Load Transfer Platform (LTP) should be analyzed using one or more of the following methods:

- Hewlett and Randolph method;
- EBGEO method;
- concentric arches method;
- numerical methods.

NOTE 1. Details of these methods are given in Annex F.5.

(5) <PER> Load transfer through a load transfer platform may be analyzed using a method not given in (1) provided it has been calibrated and validated against comparable experience.

(6) <REQ> If the structure analysis is done by a numerical method, then the software used shall be calibrated and validated against comparable experience.

(7) <PER> Actions applied to a load transfer platform from an embankment and any surcharge may be reduced by support from underlying low bearing strata, if it can be shown to act throughout the structure's entire design service life.

NOTE 1. Details of the methods and checks are given in Annex F.5.

9.5.7 Voids overbridging (overbridging systems in areas prone to subsidence)

(1) <PER> Overbridging systems that include geosynthetic reinforcing elements may be used over areas prone to subsidence to limit differential deformation on embankment surface.

(2) <REQ> The overbridging systems shall be designed for either a specified short-term support function that could occur at any time during the design service life of the structure or for a persistent design situation.

(3) <REQ> If the design of overbridging systems is for a specified short-term design service life, the system shall comprise of monitoring system, which shall indicate the location of void creation in order to backfill the created void within the specified short-term design period.

(4) <REQ> In persistent design situations, it shall be verified that the reinforcement satisfies the long term strain criteria required to ensure that the surface deformations remain within specified limits.

(5) <RCM> Loads in reinforcing elements should be determined assuming one or more of the following failure mechanisms, depending on the ratio of the structure's height above the void (H) to the diameter of the void (D):

- full failure of the bridging zone without lateral support, which generally applies to $H/D \leq 1$;
- full failure of the bridging zone with lateral support, which generally applies to $1 < H/D \leq 3$;
- failure below developed soil arch, which generally applies to limited design periods and $3 < H/D$;
- failure below developed arch in stabilised soil, which generally applies to permanent design situations.

NOTE 1. Details of these methods are given in Annex F.6.

(6) <PER> Loads in reinforcing elements may be determined using a method not given in (4) provided it has been calibrated and validated against comparable experience.

9.5.8 Veneer stability

(1) <REQ> It shall be verified that the long-term design strength of reinforcing elements along the underlying slope is greater than the load effect generated by the cover soil sliding over the weakest linear slip surface. The loads shall be calculated using the plane of least frictional resistance in the veneer cover package.

(2) <REQ> The stability of the veneer shall be verified for a transient design situation in which construction plant travels on the veneer layer.

(3) <REQ> The stability of the anchorage at the top of the veneer, and any intermediate anchorages down the slope, shall be verified.

NOTE 1. Further details are given in Annex F.7.

9.5.9 Reinforcement under shallow foundations

(1) <REQ> The bearing resistance of shallow foundations supported by reinforcement shall be verified according to Clause 5.

NOTE 1. Guidance is given in EBGEO.

<Drafting NOTE> Suggested text to be added to Clause 5:

<PER> Soil reinforcement may be used to improve the bearing resistance below shallow foundations.

9.5.10 Geosynthetic encased columns

(1) <REQ> The design of geosynthetic encased columns, including the strength and stiffness of the reinforcing element, shall conform the Clause 10.

(2) <REQ> The strength of the reinforcing element shall be verified according to 9.6.6.

<Drafting NOTE>PT6 to add further information regarding rock applications</NOTE>

9.6 Ultimate limit states

9.6.1 General

(1) <REQ> The tensile resistance of reinforcing elements shall be verified over the entire design service life of the structure.

(2) <REQ> The tensile and shear resistance of all connections, junctions, and seams between different reinforcing elements shall be verified.

(3) <REQ> The resistance of reinforcing elements to pull-out from the soil shall be verified from the assumed position of the maximum tensile force or the location of the intersection with the assumed failure surface, up to the embedded end and up to the face of the structure when there is no mechanical connection between the reinforcement and the facing system (see Figure 9.5).

(4) <REQ> The sliding resistance of reinforcing elements along either face of the elements shall be verified.

9.6.2 Reinforced fill structures

9.6.2.1 Geotechnical resistance

(1) <REQ> The bearing, sliding, and overturning resistance of a reinforced soil structure shall be verified according to Clause 7, treating the reinforced soil structure as a single ("coherent") gravity structure.

(2) <REQ> The strength and stability of the ground surrounding a reinforced fill structure shall be verified according to Clause 4.

(3) <REQ> The bearing, sliding, and overturning resistance of a reinforced fill structure shall be verified according to Clause 4 for slip surfaces passing:

- entirely outside the structure; and
- partly outside and partly inside.

(4) <RCM> For slip surfaces passing partly outside and partly inside a reinforced soil structure, account should be taken of the extra contribution to resistance from the reinforcement.

9.6.2.2 Structural resistance (internal stability)

(1) <REQ> The tensile resistance of all reinforcing elements shall be verified.

(2) <REQ> The shear resistance of all reinforcing elements, that are assumed to carry shear loads, shall be verified.

(3) <REQ> The resistance of all connections between the individual reinforcing elements that carry load shall be verified.

(4) <REQ> The resistance of all connections between the reinforcing elements and the facing shall be verified.

(5) <REQ> The design strength of facing elements shall be determined according to EN 1992 (for concrete elements), EN 1993 (for steel elements), or ISO TR 20432 (for geosynthetics).

(6) <PER> The design strength of facing elements may be determined by testing, according to EN 1990, Annex D.

(7) <REQ> The resistance to shear failure (bulging) between facing elements when some facing elements are not connected to soil reinforcements shall be verified.

(8) <REQ> The resistance to shear failure between face elements and reinforcements when the connection relies purely on friction shall be verified.

(9) <REQ> The stability of the facing elements not connected to soil reinforcements above the top layer of reinforcement (toppling) shall be verified

(10)<REQ> The resistance to moment failure (bulging) between facing elements when some facing elements are not connected to soil reinforcements shall be verified.

NOTE 1. (8), (9) and (10) apply particularly (but not exclusively) to block type facing of reinforced fill structures. (8) applies particularly to frictional connections between facing elements and reinforcements.

NOTE 2. Some examples of facing failure mechanisms are shown in Figure 9.4.

NOTE 3. The connection strength of mechanical connections between facing elements and reinforcements, and/or between consecutive facing elements depends on the connection material and on the tensile load distribution along the reinforcement.

NOTE 4. The stability of a frictional connection between facing elements and reinforcements and/or between consecutive facing elements in (1)-(3) depends on the shear resistance between facing elements and reinforcements and between consecutive facing elements.

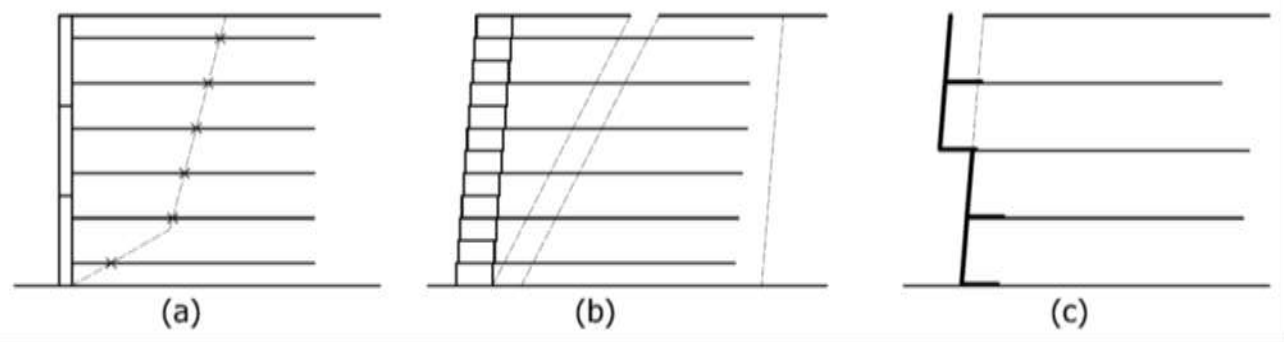

Figure 9.1 – Examples of limit states for internal stability of reinforced fill structures: (a) Tensile failure, (b) Pull-out of reinforcement, and (c) Sliding along a soil-reinforcement interface

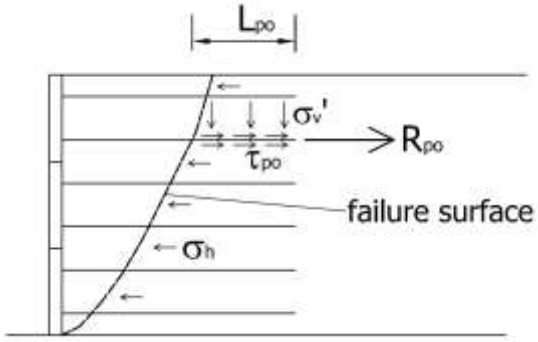

Figure 9.2 – Example of pull-out analysis of a reinforced fill structure

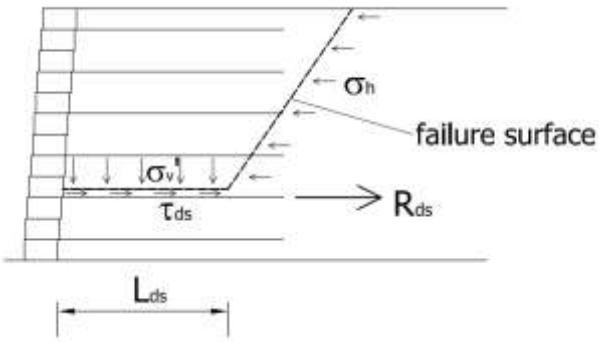

Figure 9.3 – Example of horizontal sliding analysis of a reinforced fill structure

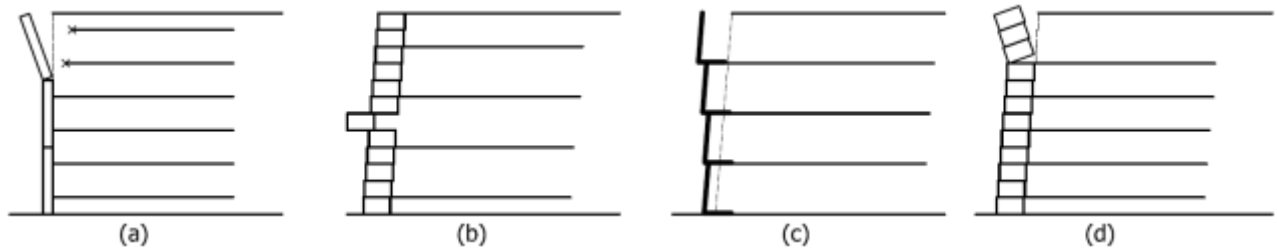

Figure 9.4 – Examples of limit states for local stability at the face: (a) connection rupture, (b) shear failure between face elements (bulging), (c) shear failure between face elements and reinforcements, and (d) toppling of top facing elements not connected to reinforcements

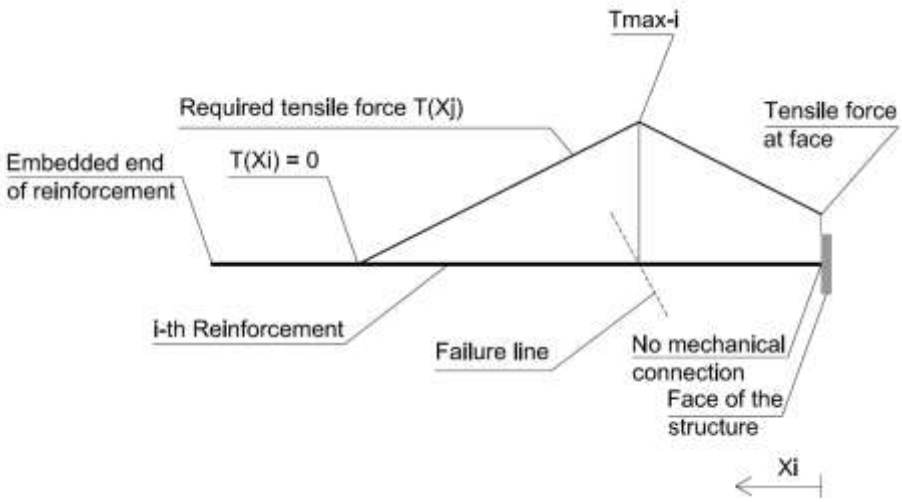

Figure 9.5 – Verification of resistance to pull-out

9.6.3 Basal reinforcement of embankments

(11)<REQ> The resistance against squeezing of low strength fine soils below a reinforced embankment shall be verified.

(12)<REQ> The stability of embankments reinforced at their base shall be verified according to Clause 4 along any slip surface that passes across or along at least one reinforcement layer, taking into account the contribution of the soil reinforcements.

(13) <REQ> The pull-out resistance of reinforcing elements shall be verified at both edges of the embankment.

9.6.4 Reinforced soil veneer

(1) <REQ> The sliding resistance of a reinforced veneer structure shall be verified along a surface internal to the soil veneer cover, without involving the interface at the bottom of the veneer soil along all the slope.

(5) <REQ> The pull-out resistance of the anchorage structure at the top of a veneer system shall be verified.

(6) The sliding resistance along the interface between the reinforcing elements and the soil veneer shall be verified.

9.6.5 Soil nailing

9.6.5.1 Geotechnical resistance

(1) <REQ> The bearing, sliding, and overturning resistance of a soil nailed structure shall be verified according to Clause 7, treating the structure as a single ("coherent") gravity structure.

(2) <RCM> The bearing, sliding, and overturning resistance of a soil nailed structure shall be verified for transient design situations during execution.

(3) Transient design situation during execution can be more critical than the subsequent persistent design situation.

(4) <REQ> The overall stability of a soil nailed structure shall be verified according to Clause 4 for slip surfaces passing:

- fully outside the structure; and
- partly outside and partly inside.

(5) <RCM> For slip surfaces passing partly outside and partly inside a soil nailed structure, account should be taken of the extra contribution to resistance from the reinforcement.

9.6.5.2 Structural resistance (Internal stability)

(1) <REQ> The tensile and shear resistance of soil nails shall be verified.

NOTE 1. The shear resistance can be decisive for sliding failure mechanisms in rock slopes.

(2) <REQ> The resistance of soil nails to pull-out shall be verified.

(3) <REQ> In case of grouted nails, both the pull-out resistance between soil nail tendon and the grout, and between the grout and the surrounding soil, shall be verified.

(4) <REQ> The resistance to failure of any connection coupler between reinforcing elements themselves shall be verified.

(5) <REQ> The resistance to failure of any connection between reinforcing elements and the facing shall be verified.

(6) <REQ> The structural resistance of head plate elements shall be verified.

(7) <REQ> The tensile strength of wire steel mesh and other flexible facings shall be verified.

(8) <REQ> The punching resistance of the facing shall be verified.

(9) <REQ> The flexural resistance and reinforcement detailing of concrete, steel, and other hard facings shall be verified.

(10) <REQ> The durability of the facing material itself and all connections for the design service life shall be verified.

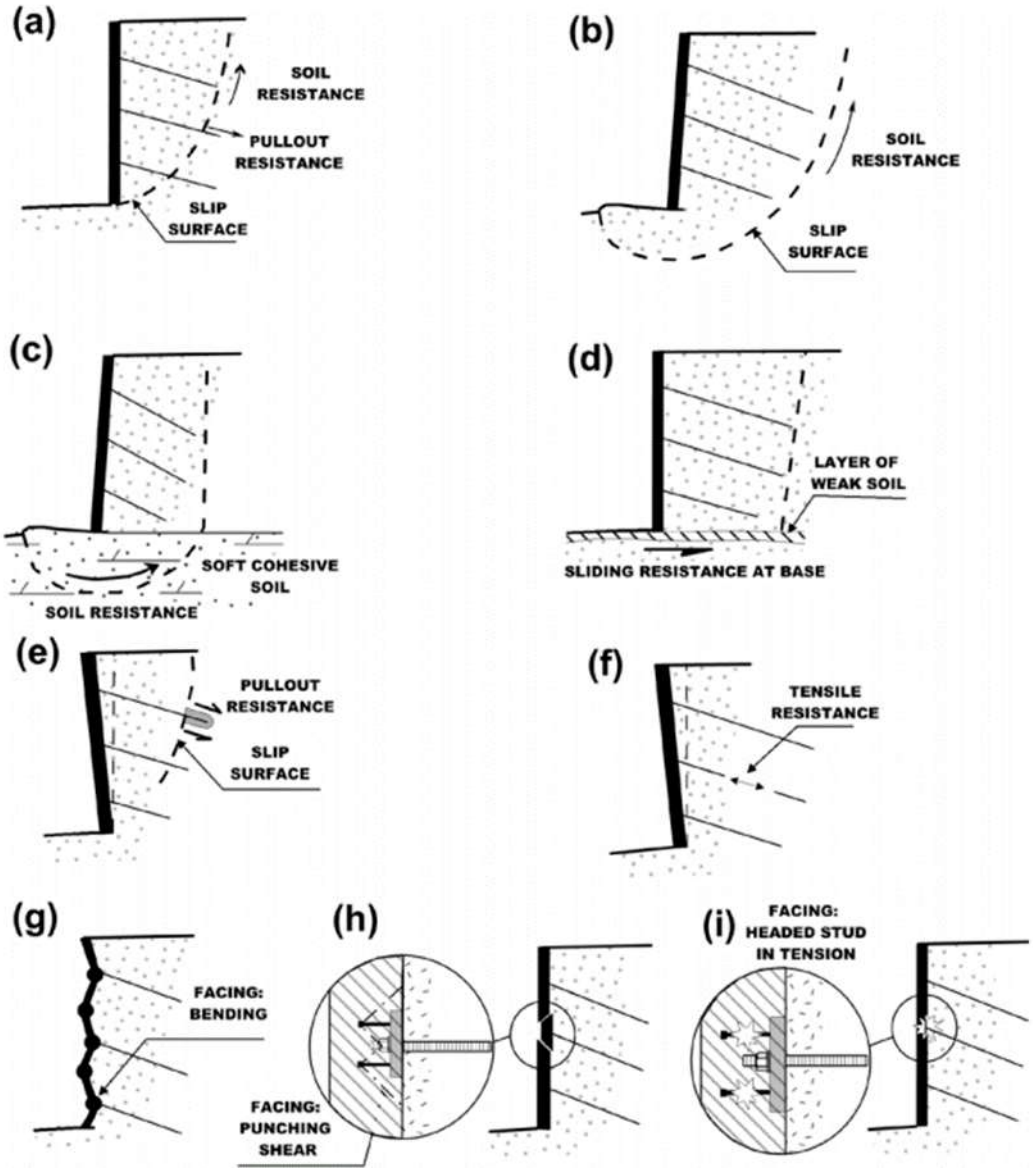

Figure 9.6 – Examples of limit states of soil nailed structures: (a) internal rotational stability; (b) external rotational stability; (c) basal heave; (d) translational failure (sliding); (e) soil nail pull-out; (f) soil nail tensile failure; (g) bending of the facing; (h) punching shear in the facing; (i) head plate failure

9.6.6 Structural design

9.6.6.1 General

(1) <REQ> The design resistance (R_d) of a reinforcing element at a given location along its length shall be determined from Formula (9.1):

$$R_d = \min(R_{td}; R_{d,po}; R_{d,ds}) \tag{9.1}$$

where:

T_d is the design tensile strength of the reinforcing element;

$R_{d,po}$ is the design value of the pull-out resistance mobilised along the interface between the ground and the reinforcing element;

$R_{d,ds}$ is the design value of the resistance to direct shear mobilised along the interface between the ground and the reinforcing element.

NOTE 1. T_d, $R_{d,po}$, and $R_{d,ds}$ are usually expressed in units of force per unit width of structure.

(2) <RCM> The adverse effects of the following on the strength of the reinforcing elements should be considered:

- the electro-chemical characteristics of the surrounding fill and ground;
- the risk of ground pollution by external agents during the service lifetime;
- the temperature along the reinforcements;
- the potential chemical and biological degradation;
- the presence and characteristics of water;
- the dynamic or cyclic loadings (material fatigue).

(3) <REQ> The pull-out and direct shear resistances shall be based on documented tests in comparable situations or from project-specific tests.

NOTE 1. Examples of pull-out and direct shear mechanisms are shown in Figure 9.2 and Figure 9.3, respectively.

(4) <REQ> The resistance of the connection between the facing and reinforcement shall be determined by testing the specific connection or by calculation

9.6.6.2 Tensile strength of geosynthetic element

(1) <REQ> The design tensile strength for the specified design service life (T_d) of geogrids, geotextiles, and geostrips shall be calculated from Formula (9.2):

$$T_d = \frac{\eta_{gs} T_k}{\gamma_{Rd} \gamma_{M,gs}} \tag{9.2}$$

where:

T_k is the characteristic tensile strength of the reinforcing element

η_{gs} is a reduction factor accounting for anticipated loss of strength with time and other influences;

$\gamma_{M,gs}$ is a partial factor, given in 9.6.10;

γ_{Rd} is a model factor accounting for additional uncertainty owing to extrapolation of measured strengths to the design service life.

NOTE 1. The value of γ_{Rd} is specified in ISO TR 20432, where it is given the symbol f_s.

(2) <REQ> The reduction factor η_{gs} shall be calculated from Formula (9.3):

$$\eta_{gs} = \eta_{cr} \cdot \eta_{dmg} \cdot \eta_{w} \cdot \eta_{ch} \cdot \eta_{dyn} \tag{9.3}$$

where:

η_{cr} is a reduction factor accounting for the adverse effect of tensile creep due to sustained static load over the design service life of the structure;

η_{dmg} is a reduction factor accounting for the adverse effects of mechanical damage during execution;

η_{w} is a reduction factor accounting for the adverse effects of weathering;

η_{ch} is a reduction factor accounting for the adverse effects of chemical and biological degradation of the element;

η_{dyn} is a reduction factor accounting for the adverse effects of intense and repeated loading over the design service life of the structure.

NOTE 1. The values of η_{cr}, η_{dmg}, η_{w}, and η_{ch} are the reciprocals of the reduction factors specified in ISO TR 20432, as RF_{CR}, RF_{ID}, RF_{W}, and RF_{CH}, respectively.

NOTE 2. The value of η_{dyn} is the reciprocal of the reduction factor specified in EBGEO as A_5.

NOTE 3. For short term or rapid loading η_{cr} may be modified in accordance with ISO TR 20432 to allow for the nature of the applied load

NOTE 4. The factor η_{w} has a value of 1.0 except if the reinforcement is not covered by soil witin 1 day from installation.

9.6.6.3 Tensile strength of fill steel reinforcement

<Drafting NOTE>Alternative clauses prepared by PT5 and WG3/TG6 are to be discussed in at the SC7/WGs Delft meeting before inclsuino here</Drafting NOTE>

9.6.6.4 Tensile strength of polymeric-coated metallic woven wire mesh

(1) <REQ> The design tensile strength (T_d) of polymeric-coated metallic woven wire mesh shall be calculated from Formula (9.5):

$$T_d = \frac{\eta_{pwm} T_k}{\gamma_{Rd} \gamma_{M,pwm}} \tag{9.5}$$

where:

T_k is the characteristic tensile strength of the reinforcing element;

η_{pwm} is a reduction factor accounting for anticipated loss of strength with time and other influences;

$\gamma_{M,pwm}$ is a partial factor, given in 9.6.10;

γ_{Rd} is a model factor accounting for additional uncertainty owing to extrapolation of measured strengths to the design service life.

NOTE 1. The value of γ_{Rd} is specified in ISO TR 20432, where it is given the symbol f_s.

(2) <REQ> The reduction factor η_{pwm} shall be calculated from Formula (9.6):

$$\eta_{pwm} = \eta_{dmg} \cdot \eta_{ch} \cdot \eta_{dyn} \tag{9.6}$$

where:

η_{dmg} is a reduction factor accounting for the adverse effects of mechanical damage during execution;

η_{ch} is a reduction factor accounting for the adverse effects of chemical (including corrosion) and biological degradation of the element;

η_{dyn} is a reduction factor accounting for the adverse effects of intense and repeated loading over the design service life of the structure.

NOTE 1. The values of η_{dmg} and η_{ch} are the reciprocals of the reduction factors specified in ISO TR 20432, as RF_{ID}, and RF_{CH}, respectively.

NOTE 2. The value of η_{dyn} is the reciprocal of the reduction factor specified in EBGEO as A_5.

(3) <REQ> The evaluation of η_{ch} shall account for the loss of protection to the metallic wires caused by mechanical damage during execution to the polymeric and zinc-aluminium alloy coatings as well as to the metalic wires.

NOTE 1. The polymeric and a zinc-aluminium alloy coatings have no structural function, since theirs only purpose is to protect the metallic wires.

9.6.6.5 Tensile strength of soil nails

(1) <REQ> The design tensile strength (T_d) of steel soil nails shall be calculated from Formula (9.4).

(2) <REQ> Corrosion protection of metallic soil nails shall be achieved by using one or more of the following approaches:

- sacrificial thickness allowance;
- grout, mortar or concrete cover;
- grouted duct;
- surface coating;
- stainless steel.

(3) <REQ> For steel nails, the reduced cross-sectional areas ($A_{r,y}$ and $A_{r,u}$) in Formula (9.4) shall be calculated using Formula (9.4b).

NOTE 1. For black steel nail without any corrosion protection measures the value of k_y is 2.5 and k_u is 1.0.

(4) <RCM> Soil-specific studies should be performed to determine the value of Δe.

NOTE 1. Values of $\Delta e/2$ for black steel nails without any corrosion protection measures for different service lives are given in Tables 4.1 and 4.2 of EN 1993-5, unless the National Annex gives different values.

NOTE 2. Assessment of ground corrosivity can be found also in Clouterre (xxxx), including the values of Δe.

(5) <RCM> For assessment of corrosion protection of grout cover with or without duct the provisions of EN 1537 should be followed.

(6) <REQ> If non-metallic nails are used the corresponding long-term strength shall be verified.

NOTE 1. The durability of the non-metallic nails can be affected by (i) degradation due to mechanical damage during site handling (e.g. abrasion and wear, punching, tear, etc.); (ii) loss of strength due to creep and hydrolysis; and (iii) deterioration from exposure to ultraviolet radiation and heat of hydration during grouting. Indications for the determination of long-term behaviour can be found in BS 8006-2:2011 and CIRIA C637.

9.6.7 Pull-out resistance of reinforcing elements

9.6.7.1 General

(1) <REQ> The design pull-out resistance ($R_{d,po}$) of a reinforcing element shall be calculated from Formula (9.7):

$$R_{d,po} = \frac{R_{k,po}}{\gamma_{R,po}} \tag{9.7}$$

where:

$R_{k,po}$ is the characteristic pull-out resistance of the reinforcing element;

$\gamma_{R,po}$ is a partial factor, given in 9.6.10.

(2) <REQ> The characteristic pull-out resistance ($R_{k,po}$) of a reinforcing element shall be calculated from Formula (9.8):

$$R_{k,po} = P \int_0^L \tau_{po}(x) \cdot dx \tag{9.8}$$

where:

P is the length of the perimeter of the reinforcing element;

τ_{po} is the shear resistance (in units of stress) against pull-out along the soil-reinforcement interface;

X is distance along the length of the reinforcing element;

L is the total length of the reinforcing element beyond the failure surface (or line of maximum tension) where pull-out stresses are mobilized.

9.6.7.2 Sheet fill reinforcement

(1) <REQ> For sheet reinforcement (geogrids and geotextiles), the value of τ_{po} in (9.8) shall be calculated from Formula (9.9):

$$\tau_{po}(x) = k_{po} \tan \varphi_{rep} \, \sigma'_v(x) \tag{9.9}$$

where:

τ_{po} is the shear resistance (in units of stress) against pull-out along the soil-reinforcement interface;

φ_{rep} is the representative angle of friction of the surrounding soil;

σ'_v is the vertical effective stress acting on the reinforcing element;

k_{po} is a pull-out factor.

NOTE 1. The value of k_{po} is obtained through laboratory pullout tests in representative conditions or in-situ tests.

(2) <REQ> The perimeter P of sheet reinforcement shall be taken as the sum of the widths of the top and bottom faces.

NOTE 1. For sheet reinforcement covering the full horizontal area P has a value of 2.

9.6.7.3 Discrete fill reinforcement

(1) For discrete fill reinforcement (strips and ladders), the value of τ_{po} in (9.9) shall be calculated from Formula (9.10):

$$\tau_{po}(x) = \mu_{po} \sigma'_v(x) \tag{9.10}$$

where, in addition to the symbols given for (9.9):

μ_{po} is the coefficient of friction determined in laboratory pullout tests in representative conditions or in situ tests.

(2) <RCM> The perimeter P of strips and ladders shall be taken as twice the product of n and b, where n is the number of strips or ladders per unit width of structure and b is the width of the individual strips or ladders

9.6.7.4 Soil nails

(1) <REQ> For soil nails, the value of τ_{po} in (9.9) shall be calculated from Formula (9.11):

$$\tau_{po}(x) = \frac{q_{sk}}{\xi_{sn} k_{sn}} \tag{9.11}$$

where in addition to the symbols given for (9.9):

q_{sk} is the characteristic skin friction along the soil nail;

ξ_{sn} is a correlation factor accounting for the number of field tests performed or comparable experience;

k_{sn} is a (trial) pull-out factor.

(2) <RCM> The perimeter P of a soil nail shall be taken as πD, where D is the outside diameter of the drilling tool or casing.

9.6.8 Resistance to direct shear along interface

(1) <REQ> The design resistance to direct shear mobilised along the interface between the fill and the reinforcing element ($R_{d,ds}$) shall be calculated from Formula (9.12):

$$R_{d,ds} = \frac{R_{k,ds}}{\gamma_{R,ds}} \tag{9.12}$$

where:

$R_{k,ds}$ is the characteristic resistance to direct shear;

$\gamma_{R,ds}$ is a partial factor, given in 9.6.10.

(2) <REQ> The characteristic resistance to direct shear ($R_{k,ds}$) shall be calculated from Formula (9.13):

$$R_{k,ds} = B\int_0^{L} \tau_{ds}(x)\cdot dx = B\int_0^{L} f_{ds}\sigma'_n(x)\cdot dx \tag{9.13}$$

where:

B is the breadth of the reinforcing element;

τ_{ds} is the resistance (in units of stress) against direct shear along the soil-reinforcement interface;

X is distance along the length of the reinforcing element;

L_{ds} is the total length of the reinforcing element along which direct shear stresses are mobilized;

f_{ds} is a direct shear factor;

σ'_n is the normal effective stress acting on the reinforcing element.

NOTE 1. The value of f_{ds} is obtained through direct shear tests

NOTE 2. The vertical effective stress is a good approximation for the normal effective stress provided the inclination of the reinforcing element is less than 10°.

9.6.9 Resistance of connections

(1) <REQ> The design tensile strength (T_d) of a connection for geogrids, geotextiles, and geostrips shall be calculated from Formula (9.13):

$$T_d = \frac{\eta_{gs} T_k}{\gamma_{Rd}\gamma_{M,gs,c}} \tag{9.13}$$

where in addition to the symbols given for (9.2):

$\gamma_{M,gs,c}$ is a partial factor for the connection, given in **Error! Reference source not found.**.

(2) The design tensile strength (T_d) of steel strips, rods, bars, ladders, and welded wire meshes shall be calculated in accordance with EN 1993-1-1 8.2.3, using Formula (9.14):

$$T_d = min\left(\frac{Af_y}{\gamma_{M0}}; \frac{A_{net}f_u}{\gamma_{M2}}\right) \quad (9.14)$$

where in addition to the symbols given for (9.4):

$\gamma_{M0,c}$ $\gamma_{M2,c}$ are partial factor for the connection, given in 9.

(3) The design tensile strength at connections made of other materials shall be determined according to EN 1992 for concrete or EN 1993 for steel, as appropriate.

(4) The design tensile strength (T_d) of metalic soil nails tendons shall be calculated in accordance with xxx:

<Drafting NOTE>The provisions from execution standard EN 14490 will be implemented here>

(5) The design tensile strength (T_d) of non-metalic soil nails tendons shall be calculated in accordance with xxx:

<Drafting NOTE>To be added here>

(6) <REQ> Facing elements shall be verified according to the standard appropriate for the material from which they are made.

9.6.10 Partial factors

(1) <RCM> The ultimate resistance of a reinforced soil structure should be verified using a combination of:

- the material factor approach, with:
  - factors γ_F applied to actions according to Formula (8.4) of EN 1990; and
  - factors γ_M applied to ground properties according to Formula (8.12); or
- the resistance factor approach, with:
  - factors γ_E applied to effects-of-actions according to Formula (8.5); and
  - factors γ_R applied to ground resistance, using Formula (8.13).

NOTE 1. Values of the partial factors are given in Table 9.1 (NDP) for persistent and transient design situations unless the National Annex gives different values.

Table 9.1 (NDP) – Partial factors for the verification of resistance of reinforced soil structures for fundamental (persistent and transient) design situations

<Drafting NOTE: values in this Table are indicative. To be amended after TG calibration >

Verification of	Partial factor on	Symbol	Material factor approach (MFA)		Resistance factor approach (RFA)
			(a)	(b)	
All situations	Actions and effects-of-actions	γ_F and γ_E	DC4[1]	DC3[1]	DC4[1]
	Ground properties	γ_M	M1[2]	M3[2]	Not factored
Reinforcing element rupture	Tensile strength of geosynthetic reinforcement	$\gamma_{M,gs}$	1,1		
	Tensile strength of steel reinforcement	γ_{M0}, γ_{M2}	<To be discussed at SC7/WGs meeting in Delft>		
Interface between reinforcing element and ground	Interface friction between geosynthetic reinforcement and soil	$\gamma_{gs,int}$	1,1×M1[2]	1,1×M3[2]	1,5
	Interface friction between steel reinforcement and soil	$\gamma_{st,int}$	1,1×M1[2]	1,1×M3[2]	1,5
	Interface friction between soil nail and ground	$\gamma_{sn,int}$	1,1×M1[2]	1,1×M3[2]	1,5
Overall stability	See Clause 4				
Rotational and bearing resistance of equivalent gravity walls	See Clause 7				

[1]Values of the partial factors for Design Cases (DCs) 3 and 4 are given in EN 1990 Annex A.
[2]Values of the partial factors for Sets M1 and M3 are given in EN 1997-1 Annex A.

9.7 Serviceability limit states

9.7.1 Serviceability limit states of whole structure and it subsoil

(1) <REQ> Deformation of the subsoil due to the loading of the reinforced soil structure shall not exceed the specified limits.

NOTE 1. Reinforced soil structures are able to withstand differential settlements and movements caused by poor foundation soils without damage. The type of facing, if any, determines the amount of settlement that can be withstood. Guidance for typical values for different facing types is given in EN 14475.

9.7.2 Serviceability limit states of reinforcing structure itself

(1) <REQ> Deformation of the whole structure both vertically and horizontally shall be limited to ensure compliance with the specification.

(2) <REQ> Internal deformation of the structure shall be limited to ensure compliance with the specification.

9.7.3 Serviceability limit states of reinforcing element

(1) <REQ> Excessive elongation of the reinforcing elements both in the short and long term causing unacceptable face movement shall be limited to ensure compliance with the specification.

9.7.4 Serviceability limit states of facing element

(1) <REQ> Resistance to bulging of segmental block and flexible facing systems shall be verified to ensure compliance with the specification.

(2) <REQ> The strength of panel facings shall be verified and suitable jointing systems specified.

(3) <REQ> Resistance to spalling and cracking of panel facings shall be verified.

(4) <REQ> Resistance to bulging at the toe of a reinforced veneer system shall be assessed to ensure compliance with the specification.

9.8 Execution

9.8.1 General

(1) <REQ> The design, execution and control of reinforced soil structures shall conform to EN 1997-1, 9.8.

(2) <REQ> The design, execution and control of reinforced fill structures shall additionally conform to EN 14475.

(3) <REQ> The design, execution and control of soil nailed structures shall additionally conform to EN 14490.

(4) <REQ> The level of the excavation including construction tolerances shall be specified in the design construction sequence. These levels shall be controlled during the execution.

9.8.2 Execution control

9.8.3 Supervision

9.8.3.1 General items to be checked

(1) <REQ> The Inspection Plan specified in EN 1997-1, 10, shall include:

- verification of ground and groundwater conditions, and of the location and general layout of the new reinforced soil structure and any adjacent settlement sensitive structure (above and below ground);
- verification of the sequence of works, and control of ground excavation levels.;
- verification of the quality of foundation ground, including as necessary placement of a concrete screed or a drainage layer properly compacted;
- verification of properly compacted fill, if used;
- safety of workmen with due consideration of geotechnical limit states.

(2) <REQ> If the sequence of works or ground excavation levels are no longer consistent with design assumptions, they shall be immediately revised and the design modified accordingly.

(3) <REQ> If ground or groundwater conditions are found to differ significantly from design or method assumptions or reveal significant heterogeneities that invalidate the Geotechnical Design Model, the design shall be re-evaluated and additional investigations prescribed if necessary.

(4) <REQ> If fill strength properties are found to lower from design assumptions / specifications, design shall be re-evaluated or works rebuild.

9.8.3.2 Water flow and groundwater pressures

(1) <REQ> The Inspection Plan specified in EN 1997-1, 10, shall also include:

- adequacy of systems to ensure control of groundwater pressures in all aquifers where excess pressure could affect stability of slopes or base of excavation, including artesian pressures in an aquifer beneath the excavation
- disposal of water from dewatering systems; depression of groundwater table throughout entire excavation to prevent boiling or quick conditions, piping and disturbance of formation by construction equipment
- diversion and removal of rainfall or other surface water;
- efficient and effective operation of dewatering systems throughout the entire construction period, considering encrusting of well screens, silting of wells or sumps;
- wear in pumps;
- clogging of pumps
- control of dewatering to avoid disturbance of adjoining structures or areas;
- observations of piezometric levels;
- effectiveness, operation and maintenance of water recharge systems, if installed; and
- effectiveness of sub-horizontal borehole drains, if installed.

(2) <RCM> In addition to (1), the Inspection Plan should include:

- groundwater flow and pressure regime;
- effects of dewatering operations on groundwater table;

- effectiveness of measures taken to control seepage inflow;
- internal erosion processes and piping;
- chemical composition of groundwater; and
- durability of the reinforcing element.

9.8.4 Monitoring

9.8.4.1 General items to be checked

(1) <REQ> The Monitoring Plan specified in EN 1997-1, 10, shall include:

- settlements at established time intervals of adjoining structures or areas, more especially in the case of compressible or poor quality soil layers;
- evolution of existing cracks in adjacent structures;
- piezometric levels under buildings or behind the structure, or in adjoining areas, especially if permanent dewatering systems are installed;
- deflection or displacement of retaining structures;
- behaviour of temporary support systems; and
- water tightness, if required;
- lateral and vertical displacements and distortions.

9.8.4.2 Geotechnical monitoring

(1) <REQ> Geotechnical monitoring shall include visual inspection and measurements of the behaviour of the reinforced soil structure and its surrounding (through items listed in clause 9.8.4.1) in order to check the validity of:

- the Geotechnical Design Model and other design assumptions;
- predictions of performance made during the design.

(2) <RCM> Geotechnical monitoring should also be implemented to record the actual performance of the retaining structure in order to collect databases of comparable experience.

(3) <RCM> Experience gained from geotechnical monitoring should be recorded in order to improve calculation models, and also to be used as a reference, when using the Observational Method, in situations where calculation models are not reliable enough to demonstrate that there is an acceptable probability that the actual behaviour will be within the acceptable limits (see 9.8.4.3).

(4) <RCM> All measurements provided should be performed at established time intervals and at established execution stages, relevant for the behaviour of the reinforced soil structure and for comparison with the estimates of the design and for any special events that might occur during the lifetime of the reinforced soil structure, such as earthquakes, floods, impacts, or similar.

(5) <RCM> For each series of measurements, details should be given to describe the status of the execution works or any other relevant aspects to the behaviour of the reinforced soil structure (including excavations or fills, surcharges, and drainage).

9.8.4.3 The Observational Method

(1) <REQ> When any of the conditions described hereafter is met, the Observational Method shall be implemented during the works:

- the complexity of ground conditions, specific soil behaviour, or soil structure interaction makes it difficult to predict the geotechnical behaviour accurately enough;
- sensitive environmental conditions or structural requirements result in displacements criteria lower than the accuracy of calculation models themselves;
- geotechnical monitoring does not confirm predictions of performances made during the design phase.

(2) <PER> The Observational Method may be implemented to optimise the design of the reinforced soil structure, when geotechnical conditions are likely to be less severe than described in the Geotechnical Design Model.

(3) <REQ> When the Observational Method is used for the design of a reinforced soil structure, the following requirements shall be met before it is started:

- acceptable limits of behaviour shall be established;
- the range of possible behaviour shall be assessed, and it will be shown that there is an acceptable probability that the acceptable behaviour will be within the acceptable limits;
- a plan of monitoring shall be devised: the critical measurements must be able to be obtained reliably, and reveal whether the actual behaviour lies within the acceptable limits. The monitoring shall make this clear at a sufficiently early stage, and with sufficiently short intervals to allow contingency actions to be undertaken successfully;
- the response time of the instruments, and the management and communications procedures for analysing the results and making appropriate decisions shall be sufficiently rapid in relation to the possible evolution of the system;
- a plan of contingency actions shall be devised, and fully developed with all necessary equipment available so that contingency actions can be implemented within acceptable timescale if the monitoring reveals behaviour outside acceptable limits;
- all project stakeholders shall be actively involved and supportive of the use of the observational method.

9.8.4.4 Maintenance

(1) <REQ> For permanent reinforced soil structures, the Geotechnical Design Report shall include specifications relative to maintenance and specifically for sensitive elements.

NOTE 1. Examples of sensitive elements include facings, drains, and pumping wells.

9.9 Testing

9.9.1 Reinforced fill structures

9.9.1.1 Interface strength

(1) <REQ> The determination of interface shear strength between soil and geosynthetic reinforcement shall conform to ISO 12957.

(2) <REQ> The determination of pull-out resistance of geosynthetic reinforcement from soil shall conform to EN 13738.

<Drafting NOTE: to be further elaborated further to distinguish planar and strip/bar reinforcing elements, especially if only non ISO/EN standards available>

9.9.1.2 Connection strength

<Drafting NOTE: reference to ISO 10321 to be added>

9.9.2 Soil nailed structures

9.9.2.1 Strength of reinforcing element

(1) <REQ> The determination of the tensile strength of soil nail tendons shall conform to the standard for raw materials from which the tendon is produced as specified by the relevant authority or for a specific project agreed with the relevant parties.

9.9.2.2 Interface strength

(1) <REQ> The determination of interface shear strength between the ground and soil nails from pull-out test shall conform to ISO 22477-6.

9.10 Reporting

9.10.1 Ground Investigation Report

(1) <REQ>The Ground Investigation Report shall conform to EN 1997-1, 12.2.

9.10.2 Geotechnical Design Report

(1) <REQ>The Geotechnical Design Report shall conform to EN 1997-1, 12.3.

9.10.3 Geotechnical Construction Record

(1) <REQ>The Geotechnical Construction Record shall conform to EN 1997-1, 12.4.

10 Ground improvement

10.1 Scope

(1) <REQ> This Clause shall apply to all forms of ground improvement used with the following geotechnical structures and applications:

- slopes, cuttings, and embankments (see also Clause 4);
- spread foundations (see also Clause 5);
- retaining structures (see also Clause 7);
- water control.

(2) <REQ> Ground improvement shall be classified according to Table 10.1 and divided into two families:

- diffused ground improvement; or
- discrete ground improvement.

NOTE 1. Examples of ground improvement in these two families are given in Table 10.2.

NOTE 2. Details of example techniques listed in Table 10.2 are given in Annex G.

Table 10.1 – Classification of ground improvement techniques

Class		Family	
		Diffused	**Discrete**
I	Improved ground	… having increased shear capacity and/or reduced permeability compared to the surrounding ground but can be classified as improved ground	… containing inclusions with increased shear capacity and stiffness compared to the surrounding ground
II	Modified Ground	… having measurable unconfined compressive strength and is significantly stiffer than the surrounding ground and/or of reduced permeability and comprises a composite of a binder and ground. It usually behaves as a structural zone	… containing rigid inclusions with measurable unconfined compressive strength and is significantly stiffer than the surrounding ground, may be an engineered material such as timber, concrete/grout or steel or a composite of a binder and ground
III	Groundwater control	… having reduced or increased permeability with a primary function to control groundwater pressures or flows	… provides either a barrier to groundwater flow or elements to increase drainage

(3) <REQ> Load transfer platforms incorporating tensile elements shall be designed in accordance with Clause 9.

(4) <REQ> Load transfer platforms without tensile elements shall be designed in accordance with Clause 5.

(5) <REQ> The interaction of load transfer platforms with ground improvement shall be designed according to this Clause 10.

NOTE 1. The design of a load transfer platform is interactive with that of ground improvement. The platform's design depends on the load distribution between the ground improvement and the ground.

Table 10.2 – Examples of ground improvement in different classes and families

Class	Family	
	Diffused	**Discrete**
I – Improved ground	Compactive Methods Soil Replacement Consolidation Methods	Granular Columns
II – Modified Ground	Grouting Methods Mixing Methods Other Methods	Grouting/Mixing Methods Steel/Wood Columns Concrete/Grout Columns
III – Groundwater control	Fissure grouting in rock Grouting methods	Cut-off walls Drains

(5) <REQ> Where the load transferred via a raft or load transfer platform to the ground is not taken into account by the design, a vertically loaded discrete inclusion shall be designed to carry all the design load and designed in accordance with Clause 6.

NOTE 1. The load distribution is determined as part of the design by numerical simulation or analytical calculation.

(6) <REQ> Where the load transferred via a raft or load transfer platform to the ground is taken into account by the design, the calculated load on the inclusion shall be designed using partial factors given in 10.6.3.

(7) <REQ> The design differentiation between a pile and a rigid inclusion shall be based on:

- the physical or structural connection or contact detail (if any) with the foundation;
- whether the foundation support design includes any load contribution from the ground other than direct shaft or other friction applied to the inclusion.

(6) <REQ> An inclusion placed in the ground in isolation and acting as a single element shall be designed as a piled foundation in accordance with Clause 6.

10.2 Basis of design

10.2.1 Design situations

(1) <REQ> Design situations shall be selected in accordance with EN 1997-1, 4.2.2.

(2) <REQ> Ground improvement for temporary works design shall only be considered where expected alterations of the improved ground over time do not impact on the structure's service life.

NOTE 1. Some forms of ground improvement might not have sufficient design service life for a temporary use which could be extended. An example would be the use of some chemical grouts which deteriorate relatively quickly.

(3) <RCM> The ground improvement method for a particular design situation should be selected taking into account the following influences:

- the design situation and load variation
  - ULS and SLS requirements
  - thickness and properties of the ground or fill material;
  - water pressure in the various strata;
  - nature, size and position of the structure to be supported by the ground;
  - prevention of damage to adjacent structures or services during execution;
  - if the ground improvement is temporary or permanent;
- in terms of anticipated deformations, the relationship between the ground improvement method and the construction sequence;
- the effects on the environment including pollution by deleterious substances or changes in groundwater level;
- the durability of the improved ground;
- any long term deterioration of the ground.

(4) <REQ> For discrete ground improvement, the verification of limit states for both individual ground improvement inclusions and of the structure supported by the ground improvement shall be considered.

(5) <REQ> Potential placement or removal of overburden and potential changes in the groundwater regime shall be considered, both in calculations and in the interpretation of load test results.

10.2.2 Geometrical data

(1) <REQ> Geometric tolerances shall be adopted that are not less than those specified in the execution standards specified in 10.8.

NOTE 1. Some execution standards give very basic tolerances that are not suitable for some designs. For example, drilling tolerances are generally large and might not provide sufficient tolerance for some groundwater control designs.

(2) <REQ> If the design of the ground improvement is sensitive to the deviation of a particular geometrical parameter then the design value of that parameter a_d shall be determined from Formula 10.1:

$$a_d = a_{nom} \pm \Delta a \qquad (10.1)$$

where:

a_{nom} is the nominal value of the geometrical parameter;

Δa is the deviation in the geometrical parameter from its nominal value.

NOTE 1. Values of Δa are given in Table 10.3 (NDP) unless the National Annex gives different values.

Table 10.3 (NDP) – Minimum deviation of geometrical parameters used in ground improvement

Geometrical Parameter	Value of Δa	
	No Control Testing is carried out and no comparable experience is available	Parameter is determined by measurement or by use of comparable experience
Soil Mix/Controlled Modulus Column/bored inclusion diameter	10 % of nominal diameter	Nominal diameter
Jet Grout inclusion diameter	10 % of a_{nom} or 0.1 m whichever is greater	5 % of a_{nom} or 0.05 m whichever is greater
Compaction Grout inclusion diameter	20 % of a_{nom} or 0.1 m whichever is greater	10 % of a_{nom} or 0.05 m whichever is greater
Vibrocompaction/stone or sand column diameter	10 % of a_{nom} or 0.1 m whichever is greater	5 % of a_{nom} or 0.05 m whichever is greater
Driven or vibrated steel/wood or concrete inclusion diameter	5 % of a_{nom} or 0.05 m whichever is greater	Nominal diameter
Inclusion location (setting out, depth range, or depth)	As relevant execution standard or as set out in Geotechnical Design Report whichever is smaller	
Deviation with depth	As relevant execution standard or set out in Geotechnical Design Report	

<Drafting NOTE: Reviewers should consider whether the values set out in Table 10.3 are acceptable or need amending. Should other geometrical parameters be considered?>

10.2.3 Actions and environmental influences

10.2.3.1 General

(1) <REQ> Actions and environmental influences on ground improvement shall be determined according to EN 1997-1, 4.3.1.

(2) <REQ> In addition to (1), the following actions and environmental influences shall be included in design situations involving ground improvement, where present:

the initial expansion or eventual contraction of a ground improvement zone due to the heat of hydration of cementitious materials or freeze/thaw of frozen ground improvement bodies;

(3) <REQ> The duration of the load and its variation over time shall be considered when selecting calculation methods and parameter values and when using load test results.

10.2.3.3 Dynamic and cyclic loading

<Text to be added later by PT6>

10.2.3.4 Actions due to ground displacement

(1) <REQ> The adverse effects of vertical and horizontal ground movement on ground improvement inclusions shall be considered.

(2) <RCM> A sensitivity analysis should be carried out to determine for each design situation whether the upper or lower representative ground property is the less favourable.

10.2.3.5 Downdrag

(1) <REQ> Downdrag shall be considered when designing discrete ground improvement.

(2) <RCM> For diffused ground improvement, downdrag should be considered at the perimeter of the improved ground zone.

(3) <REQ> If ultimate limit state design calculations are carried out with the drag force as an action, its design value shall be the maximum that could be generated by the downward movement of the ground relative to the ground improvement.

(4) <REQ> The calculation of the maximum drag force shall take account of the shear resistance at the interface between the soil and the ground improvement zone and downward movement of the ground due to self-weight compression and any surface load around the ground improvement or changes in groundwater levels.

(5) <PER> An upper bound to the drag force on a ground improvement zone may be calculated from the weight of the surcharge or change in groundwater level causing the movement, taking into account any changes in groundwater pressure due to groundwater lowering, consolidation or execution.

(6) <RCM> Interaction calculations should take account of the displacement of the ground improvement relative to the surrounding moving ground.

(7) <PER> The adverse effect of downdrag may be ignored when the ground improvement is subject to variable loading greater in magnitude than the downdrag.

10.2.3.6 Heave

(1) <REQ> Where heave of the ground results in the transfer of a load to the ground improvement then it shall be considered as an action.

(2) <REQ> If ground improvement is subject to heave that results in tensile forces or stresses, the introduction of reinforcement shall be considered.

10.2.3.7 Transverse loading

(1) <REQ> Transverse actions originating from ground movements, vehicles, or other sources around or above a ground improvement zone shall be included in the verification of limit states.

(2) <RCM> Transverse loading of discrete ground improvement should be evaluated by considering the interaction between the ground improvement inclusion, treated as stiff or flexible beams, and the moving soil mass.

(3) <REQ> If ground improvement is subject to transverse loading that results in tensile forces or stresses, the introduction of reinforcement shall be considered.

(4) <RCM> Extrusion of low strength fine soil around or between discrete ground improvement inclusions should also be considered.

10.2.4 Limit states

(1) <REQ> In addition to the limit states specified in EN 1997-1, 8.2.1, the following ultimate limit states shall be verified for all types of ground improvement:

- bearing or shear resistance failure of the ground improvement inclusion or zone;
- uplift or insufficient tensile resistance of the ground improvement inclusion;
- failure in the ground due to transverse loading of the ground improvement inclusion or zone;
- failure of the ground improvement inclusion or zone in compression, tension, bending, buckling or shear;
- combined failure in the ground and in ground improvement inclusion or zone;

(2) <RCM> Ultimate limit states other than those given in (1) should be verified as necessary.

(3) <RCM> An analysis of the interaction between structure, ground improvement and ground should be carried out to prove that the limit state requirements are met.

(4) <REQ> In addition to the limit states specified in EN 1997-1, 9, the following serviceability limit states shall be verified for all types of ground improvement:

- excessive ground improvement zone or inclusion settlement and differential settlements;
- excessive heave;
- excessive transverse movement;
- excessive movement or distortion of the supported structure caused by ground improvement zone movement.

(5) <RCM> Serviceability limit states other than those given in (4) should be verified as necessary.

10.2.5 Robustness

(1) <RCM> A robust design in accordance with EN1997-1, 4.1.4 should be considered for structures in Geotechnical Categories 2 and 3:

- ground improvement subject to brittle failure inducing sudden excessive movement should include ductile reinforcement (steel or fibre);
- where reduction of hydraulic conductivity is required, the design should ensure that the presence of gaps or windows in the treatment are sufficiently small or isolated so as not compromise the overall design.

10.2.6 Ground investigation

(1) <REQ> For both discrete and diffused ground improvement, the minimum depth of investigation (d_{min}) below the depth of any proposed ground improvement shall be determined according to Formula (10.2):

$$d_{min} = max(5\ m; 3D; B_{gi}) \tag{10.2}$$

where:

D is the base diameter (for circular ground improvement inclusions) or one-third of the perimeter (for non-circular ground improvement) of the inclusion with the largest base;

B_{gi} is the smaller plan dimension of a rectangle circumscribing the ground improvement zone, limited to a maximum of 25 m.

(2) <REQ> For inclusions founded on or in strong homogenous ground, d_{min} shall be determined according to Formula (10.3):

$$d_{min} = max(2\ m; 3D) \tag{10.3}$$

(3) For ground improvement installed as a lateral or vertical permeability barrier, the ground investigation shall determine the variability in hydraulic conductivity within the zone of influence of the barrier.

(4) <REQ> The scope of the ground investigation shall ensure that for the envisaged ground improvement technique, sufficient investigation points are included to determine the spatial ground variation that could affect the improved ground properties.

(5) <REQ> Correlations for estimating parameters from in situ tests (particularly oedometric modulus) on fine and organic soils shall be verified by laboratory tests

(6) <RCM> The number of laboratory tests should be sufficient to derive reliable representative parameters for the untreated ground.

(7) <RCM> The ground investigation should be carried out in a number of stages to reflect the progressive design and focus of ground improvement technique.

Table 10.4 – Minimum amount of ground investigation for ground improvement in different Geotechnical Categories

Geotechnical Category	Minimum amount of ground investigation
GC3	All items given below for GC2 and, in addition: – sufficient investigations to evaluate the spatial variability of critical ground parameters impacting on the ground improvement – sufficient scope to ensure high quality sampling and testing procedures to be carried out
GC2	– desk study of the site – site inspection – review of comparable ground improvement experience – investigations of ground conditions in accordance with EN 1997-2 – sufficient investigation points so that all relevant geotechnical units that the ground improvement will impact are spatially determined – Identification of all geotechnical units comprising the Geotechnical Design Model – determination of reliable ground parameters critical for the success of the ground improvement
GC1	Not applicable for Ground Improvement

10.2.7 Geotechnical reliability

10.2.7.1 Geotechnical Design Model

(1) <REQ> The Geotechnical Design Model shall include comparable ground improvement experience.

(2) <REQ> The Geotechnical Ground Model shall include information on:

- shear and stiffness parameters, grain size distribution, void ratio, hydraulic conductivity, chemical composition of ground and groundwater;
- the presence of any anisotropies or permeable horizons which could influence the ground improvement;
- the orientation, frequency, and aperture of rock joints and the composition and nature of any infill material;
- the location and nature of filled or open cavities;
- the presence of obstructions that require special ground improvement methods or equipment;
- the presence and characteristics of ground that is likely to loosen, soften or become unstable, dissolve, collapse or swell as a result of ground improvement.

10.2.7.2 Geotechnical Complexity Class

(1) <REQ> The minimum Geotechnical Complexity Class for geotechnical structures that rely on ground improvement shall be GCC2.

NOTE 1. Features of ground improvement causing uncertainty that are considered when selecting the GCC are given in Table 10.5 (NDP) unless the National Annex gives different features.

Table 10.5 (NDP) – Selection of Geotechnical Complexity Class for ground improvement

Geotechnical Complexity Class	Complexity	General features causing uncertainty
GCC 3	Higher	Considerable uncertainty regarding the following apply: • difficult ground or groundwater conditions • difficult geomorphologies or complex geological conditions • significant complexity of the ground-structure interaction • unusual application of ground improvement with no comparable experience • unusual performance requirements for the ground improvement out with documented comparable experience
GCC 2	Normal	Some of the following apply: • some uncertainty regarding the ground or ground water conditions • some ground-structure interaction • ground improvement application with previous design experience • performance requirements within previously achieved limits
GCC 1	Lower	Not applicable to Ground Improvement
[a] The terms 'difficult', 'significant', etc. are relative to any comparable experience that exists for the particular geotechnical structure and design situation		

10.2.7.3 Geotechnical Categories

(1) <REQ> If comparable experience is available, the minimum Geotechnical Category for ground improvement shall be GC2; otherwise it shall be GC3.

NOTE 1. Geotechnical Categories are defined in EN 1997-1, Table 4.3.

(2) <REQ> If the ground improvement is classified in GC2, then the Geotechnical Design Report shall document the comparable experience that justifies this classification.

10.2.7.4 Design service life

(1) <REQ> The minimum design service life (t_{life}) of the ground improvement shall be specified according to EN 1990, Table 4.2, and shall not be less than the design service life of the structure for which the ground improvement is required.

(2) <REQ>Where the ground improvement is subject to deterioration with time or other environmental influences, the design service life shall be calculated taking any such deterioration into account.

10.3 Materials

10.3.1 Durability

(1) <REQ> The durability of ground improvement shall conform to EN 1990, 4.6.

(2) <REQ> Ground improvement parameters shall be adjusted to account for potential deterioration of the ground improvement over its design service life.

10.3.2 Improved ground properties

10.3.2.1 General

(1) <RCM>The representative properties of improved ground should be initially selected based on comparable experience, relevant published data or local or general experience.

(2) <REQ> Prior to execution and testing the improved ground, an initial estimate of the resultant ground improvement representative values shall be assumed for design.

(3) <REQ> The final representative improved ground properties shall be verified by the testing of ground improvement either in-situ or by laboratory testing of exhumed material incorporated within the ground improvement.

(4) <RCM> In-situ testing of discrete ground improvement should verify the response of the system as a whole either by testing individual inclusions or by testing the system.

(5) <REQ>When determining values of improved ground properties, the following shall be considered:

- published and well-recognised information from relevant tests in appropriate improved ground conditions;
- the value of each improved ground property compared with relevant published data and local and general experience;
- variation or tolerances of improved ground properties relevant to the design;
- results of any laboratory or large-scale field trials and measurements from neighbouring constructions;
- correlations between the results from more than one type of test;
- any significant deterioration in improved ground properties that can occur during the lifetime of the structure.

10.3.2.2 Diffused or Discrete Ground Improvement – Class I

(1) <REQ> The Geotechnical Design Report shall document whether a mean, maximum or minimum measured ground property was used to determine the representative ground property in equation EN 1997-1, 4.4.3(4).

(2) <REQ> For non-cohesive ground improvement, the material partial factors for ULS verification shall be obtained from EN 1997-1, A.3.1.2.

10.3.2.3 Diffused or Discrete Ground Improvement – Class II

(1) <REQ> The characteristic value of the unconfined compressive strength of the improved ground $q_{\mathrm{uk,imp}}$ shall be determined from Formula 10.4:

$$q_{\mathrm{uk,imp}} = \exp\left(m_{\mathrm{y}} - k_{\mathrm{n}}\{P\} \cdot s_y\right) \tag{10.4}$$

where:

m_{y} mean of the measured values of $\log(q_{\mathrm{u,field}})$;

s_{y} standard deviation of the measured values of $\log(q_{\mathrm{u,field}})$;

$k_n\{P\}$ acceptance value for the sample distribution in terms of *P;*

$\log(q_{u,field})$ logarithm of the unconfined compressive strength measured in unconfined compressive tests on field samples;

P percentage of test results passing the required characteristic value.

NOTE 1. Table 10.1 gives values of k_n for varying passing percentages.

NOTE 2. The value of P is 10% unless the National Annex gives a different value.

Table 10.1 – Values of k_n to be used with Formula 10.4

Percent Passing, P (%)	5%	10%	15%	20%	25%	30%
Acceptance value, k_n	1.64	1.28	1.04	0.84	0.69	0.53

(2) <RCM>The unconfined compressive strength should be determined on cylindrical samples with a height to diameter ratio of 2. Where the sample dimensions differ then a correction should be applied as set out in EN 12716, A.1.

NOTE 1. The suitability of samples for testing can be evaluated according to EN 12716, Annex B.

(3) <RCM>A minimum number of ten samples should be assessed to determine the mean and standard deviation.

NOTE 1. Figure 10.1 can be used to estimate the required improved field strength and log coefficient of variation C_{vln} to achieve the required final characteristic strength.

NOTE 2. C_{vln} is the ratio of standard deviation and mean of the natural logarithm of a sample set.

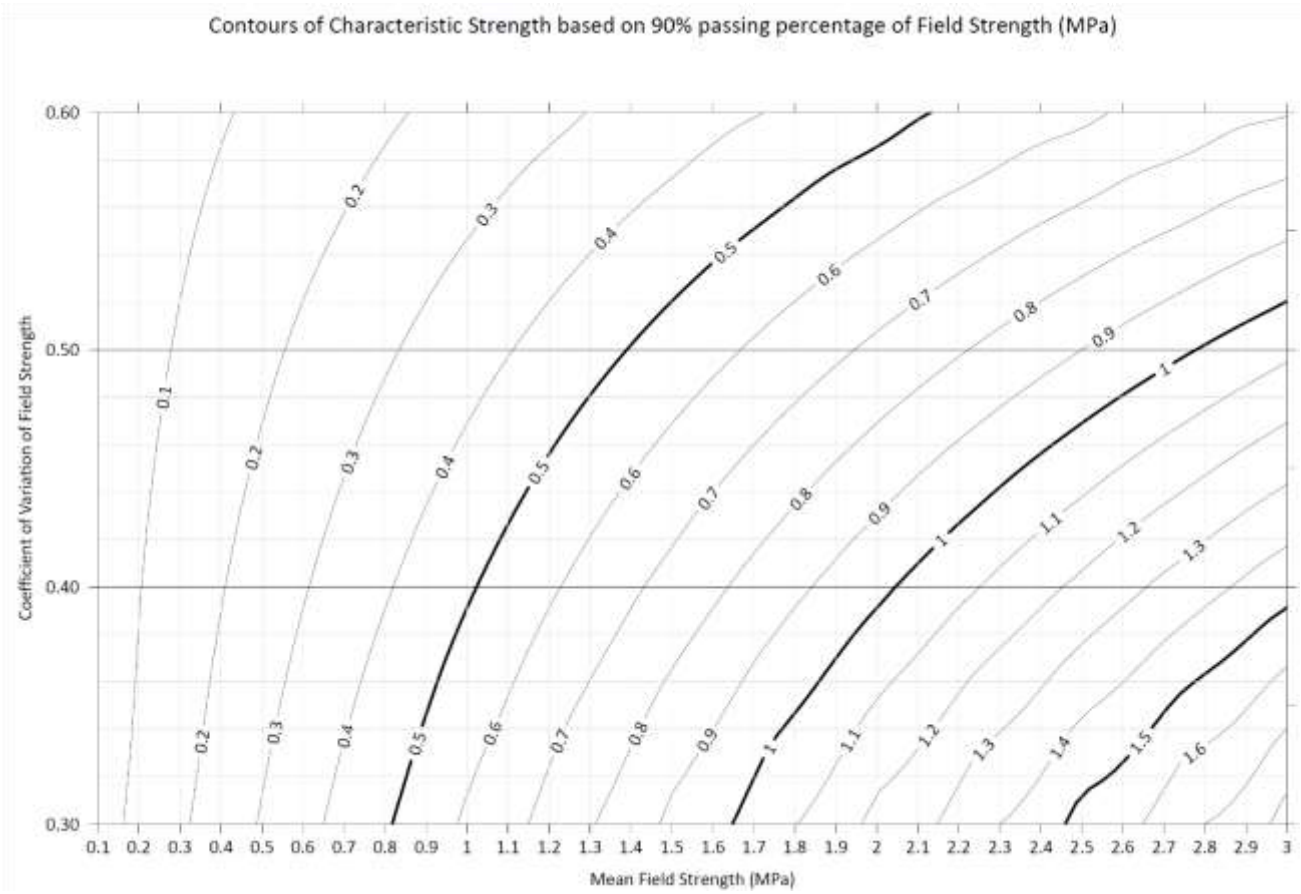

Figure 10.1 – Mean field strength versus log coefficient of variation

(4) <REQ> The selected mean field strength and required coefficient of variation shall be documented in the Geotechnical Design Report.

(5) <REQ> The design value of unconfined compressive strength (q_{ud}) of improved ground shall be determined from Formula (10.5):

$$q_{ud} = \frac{q_{u,rep}}{\gamma_M} = \frac{\eta_{cov} \cdot \eta_t \cdot \eta_c \cdot q_{uk}}{\gamma_M} \qquad (10.5)$$

where:

$q_{u,rep}$ is the representative value of the unconfined compressive strength of the improved ground;

q_{uk} is the characteristic value of the unconfined compressive strength of the improved ground;

γ_M is a partial material factor;

η_{cov} is a reduction factor allowing for testing variability;

η_t is a reduction factor accounting for the difference in time between testing (typically 28 days) and when the improved ground is exposed to the designed stresses;

η_c is a reduction factor accounting for long term effects.

NOTE 1. The value of η_c is 0.85 unless the National Annex gives a different value.

NOTE 2. The value of γ_M is given in EN 1997-1, A.3.1.2.

(6) <RCM> The value of η_{cov} should be determined from Formula 10.6:

$$\eta_{cov} = \frac{s_y}{m_y\, k_{COV}} \tag{10.6}$$

where, in addition to the symbols defined for (10.4):

k_{cov} is a statistical coefficient.

NOTE 1. The value of k_{cov} is 0.5 unless the National Annex gives a different value.

(7) <RCM> The value of η_t should be determined directly from testing for the specific type of ground improvement.

(8) <RCM> In the absence of testing and comparable experience, the value of η_t for Ordinary Portland cement-based inclusions should be determined from Formula 10.7:

$$\eta_t = 0.375 + 0.187 \ln t \leq 1.40 \tag{10.7}$$

where:

t is the time in days since the ground improvement inclusion was installed.

NOTE 1. When t = 28 days, η_t = 1.0.

(9) <REQ>The design strength of concrete, wood, and steel inclusions shall be determined in accordance with EN1992, EN1995, and EN1993, respectively.

10.3.2.4 Improved ground density

(1) <RCM> For diffused ground improvement in Class I, the improved ground density should be estimated from empirical data, comparable experience, reduction in volume or field testing.

(2) <RCM> For Class II or III ground improvement that incorporates binder with the ground, the improved ground density should be determined:

- for permeation grouting, by replacing the void content with the injected grout and reassessing density;
- for jet grouting and deep soil mixing, by considering the volume of binder being incorporated within the volume of installed inclusion.

NOTE 1. Density assessment can be impacted by incomplete filling of voids or bleeding within inclusions prior to set.

10.3.3 Water for ground improvement

(1) <REQ> Water to be used for mixing binders and/or additives shall comply with EN 1008 unless the otherwise agreed with the relevant authority or for a specific project with the relevant parties.

10.3.4 Other materials

(1) <REQ> Materials to be incorporated in ground improvement relying on shear shall conform to EN 14731, 6.

(2) <REQ> Where no European Standard exists, the performance and test requirements for the materials shall be as specified by the relevant authority or for a specific project with the relevant parties.

(3) <REQ> The use of recycled materials shall comply with the design requirements specified by the relevant authority or for a specific project with the relevant parties.

10.4 Groundwater

(1) <REQ> The design of the ground improvement shall consider the changes in groundwater chemistry, level, pressure, seepage velocity or other impacts to the environment brought about by the short or long-term presence of ground improvement inclusions.

(2) <REQ>Where ground improvement inclusions are frost or heat susceptible, the design shall include measures to prevent damage to the inclusions.

(3) <REQ> Where ground improvement is designed to limit groundwater movement, the relative hydraulic conductivity of all geotechnical units shall be considered both before and after installation to ensure that the design is applicable.

10.5 Geotechnical analysis

10.5.1 General

(1) <REQ> The design shall be based on one of the following:

- empirical or analytical calculation methods whose validity has been demonstrated by comparable experience;
- numerical methods;
- the results of static load or other tests, which have been demonstrated, by means of calculations or otherwise, to be consistent with comparable experience;
- the observed performance of comparable ground improvement, provided that this approach is supported by the results of the site investigation and ground testing.

(2) <REQ> Representative values for parameters used in the calculations shall conform to EN 1997-1, 4.3.2 taking into account the results of load or other tests.

(3) <RCM> The type and number of tests should be in accordance with the Geotechnical Category.

(4) <PER> Static load, other tests, or field trials may be carried out on sacrificial ground improvement inclusions before the design is finalised or on working inclusions that form part of the permanent works to validate the design.

10.5.2 Diffused ground improvement

(1) <REQ>Where diffused ground improvement is utilised as part of a system to support or retain a structure, the method of calculation and verification shall be as set out in the appropriate clause of EN1997-3 and the representative value to be used shall be determined from 10.3.

(2) <RCM>Where the design requires a reduction in permeability of a ground improvement zone:

- the analysis should include an assessment of the degree of imperfections/non- or partially-treated zones that could be present and their effect on the overall permeability reduction by increasing flow;
- piping failure through the imperfections should also be considered;
- the reduction in ground density as set out in 10.2.3.3 should be taken into account.

<Drafting Note> Clause (3) below will be elaborated further in the next version of EN 1997-3.

(3) <PER> Explicit verification of ultimate limit states may be omitted for the following Class II ground improvement techniques, provided the effects of actions do not exceed the states of stress given in Figure 10.2:

- jet grouting;
- soil mixing;
- grouting with cement-based binders.

NOTE 1. It is assumed that the element can crack if the principal tensile stress exceeds 10% of f_{md}.

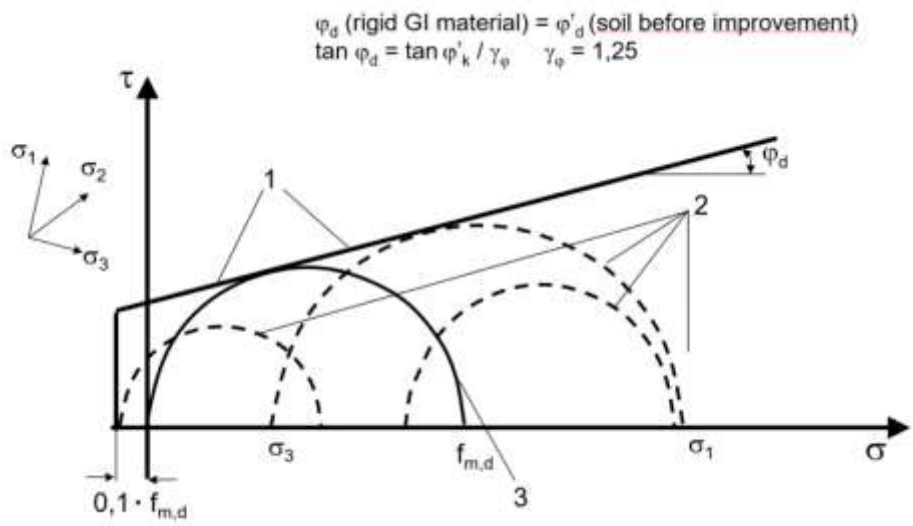

Figure 10.2 – Allowable stresses in rigid ground improvement material

φ_d (strengthened soil) = φ'_d (unimproved soil)
tan φ_d = tan $\varphi_k / \gamma_\varphi$

1 envelope for allowed states of stress
2 examples for states of stress σ_1, σ_3, allowed as the design values of effects of actions

3 state of stress in a uniaxial compression test: $\sigma_3 = 0$, $\sigma_1 = f_{m,d}$

10.5.3 Discrete ground improvement

(1) <REQ>Where discrete ground improvement is utilised as part of a system to support or retain a structure an interaction calculation method shall include:

- the evaluation of the interaction effects between the ground, discrete inclusions, and the overlying structure, embankment, or load transfer platform similar as for piled rafts (see 6.5.6);
- the derivation of the neutral plane corresponding to the point where the inclusion settlement equals the ground settlement (see Figure 10.3);
- the derivation of the distribution ratio to determine the proportion of the load applied to individual discrete inclusions;
- a verification of the structural resistance of the individual discrete inclusions;
- a verification of buckling resistance.

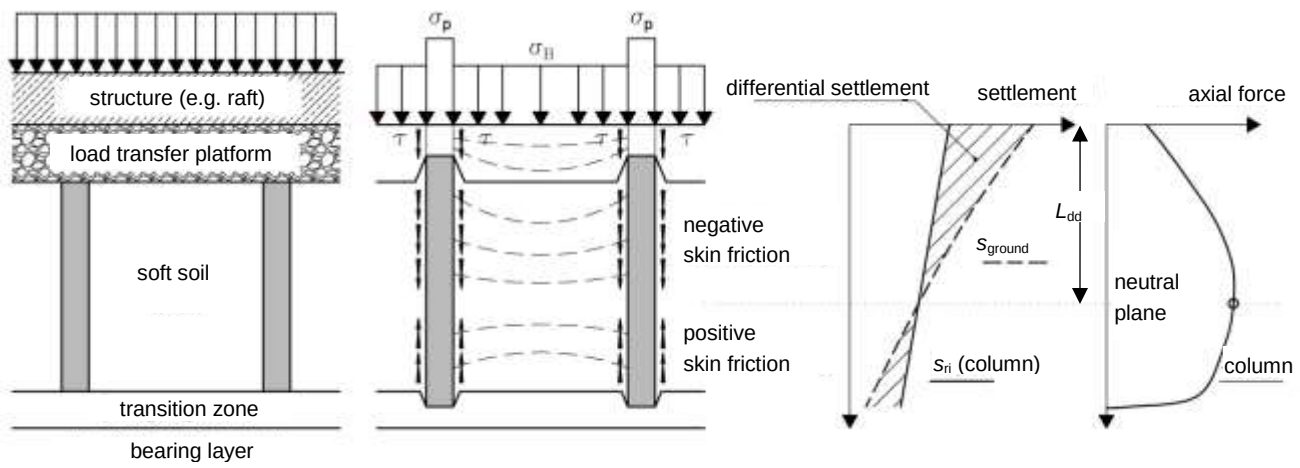

Figure 10.3 – Interaction effects of ground improvement with rigid inclusions

(2) <REQ> For discrete ground improvement the load distribution and the depth of the neutral plane L_{dd} shall be calculated according to Figure 10.3 using representative material parameters.

(3) <RCM> The total compressive resistance R_{sys} of a ground improvement system with rigid inclusions should be determined from Formula (10.8):

$$R_{sys} = \sum_{i=1}^{n} R_{ri,i} + R_g \tag{10.8}$$

where:

$R_{ri,i}$ is the compressive resistance of a rigid inclusion i;

n is the number of rigid inclusions;

R_g is the compressive resistance of the ground supporting the load transfer platform in the net area between the columns mobilized at a settlement that is compatible with the settlement of the columns.

(4) <PER> In the case of a regular grid with uniform vertical loading, the compressive resistance R_{sys} of a unit cell comprising a structure supported by a single discrete ground improvement column may be determined from Formula (10.9):

$$R_{sys} = R_{ri} + R_g \tag{10.9}$$

where:

R_{ri} is the total resistance of a single rigid inclusion below the computed depth of the neutral plane L_{dd};

R_g is the compressive resistance of the overlying load transfer platform, embankment or structure bearing on the ground surface for a unit area per rigid inclusion.

(5) <PER> Discrete rigid inclusions when used to support rafts or embankment structures may be allowed to reach their limiting value when used for the purpose of settlement reduction and ultimate limit of the overall system is not exceeded.

NOTE 1. The limiting value of the rigid inclusions is not the same as that of a single column, since it includes pile-raft effects and further interaction effects as shown in Figure 10.2.

10.6 Ultimate limit states

10.6.1 General

(1) <REQ> Verification of design shall be by the appropriate method as set out in EN 1997-1, E5.3.

(2) <REQ> For all ground improvement, verification shall determine that:

- the design improved ground properties have been achieved;
- external/geotechnical stability of the overall system and internal/structural stability of the ground improvement is achieved; and
- installed inclusions conform geometrically to the requirements of the design.

(3) <RCM> The design resistance of ground improvement system with rigid inclusions $R_{sys,d}$ should be determined from Formula (10.10):

$$R_{sys,d} = \frac{R_{sys,rep}}{\gamma_{R,sys}\gamma_{Rd}} \tag{10.10}$$

where:

$R_{sys,rep}$ is the representative value of the total resistance of the ground improvement system with rigid inclusions;

$\gamma_{R,sys}$ is a partial resistance factor for the rigid inclusion system;

γ_{Rd} is a model factor.

NOTE 1. The value of $\gamma_{R,sys}$ and γ_{Rd} is given in Table 10.6 (NDP) for persistent and transient design situations unless the National Annex gives a different value.

NOTE 2. The value of γ_{Rd} is 1.55 unless the National Annex gives a different value.

(4) <RCM> Alternatively, when using a unit cell model, the design resistance of a ground improvement system with rigid inclusions $R_{sys,d}$ may be determined from Formula (10.11):

$$R_{sys,d} = \left(\frac{R_{ri,c,rep}}{\gamma_{R,ri}\gamma_{Rd}} + \frac{R_{g,rep}}{\gamma_R}\right) \tag{10.11}$$

where, in addition to the symbols defined for (10.10):

$\gamma_{R,ri}$ are partial factors for the rigid inclusion;

γ_R is a partial resistance factor for the ground bearing component;

γ_{Rd} is a model factor.

NOTE 1. Values of $\gamma_{R,ri}$ and γ_R and are given in Table 10.6 (NDP) for persistent and transient design situations unless the National Annex gives different values.

NOTE 2. The value of γ_{Rd} is 1.55 unless the National Annex gives a different value.

(8) <PER> As an alternative to Formula 10.10, $R_{sys,d}$ may be determined from Formula (10.12):

$$R_{sys,d} = \left(\frac{R_{ri,c,rep} + R_{g,rep}}{\gamma_{R,sys}\gamma_{Rd}}\right) \tag{10.12}$$

where, in addition to the symbols defined for (10.9):

$\gamma_{R,sys}$ is an overall partial resistance factor for the rigid inclusion system,

10.6.2 Excessive deformation

(1) <REQ> Ultimate limit states caused by excessive deformations of ground improvement shall be verified according to EN 1990, 8.3.1(2).

10.6.3 Partial factors

(1) <RCM> The axial resistance of diffused ground improvement shall be verified using either:

- the material factor approach (MFA), with:
  - factors γ_F applied to actions according to Formula (8.4) of EN 1990; and
  - factors γ_M applied to ground properties according to Formula (8.12) of EN 1990;

- or the resistance factor approach (RFA), with:
  - factors γ_F applied to the actions according to Formula (8.4) of EN 1990 or factors γ_E applied to the effects-of-actions according to Formula (8.5) of EN 1990; and
  - factors γ_R applied to ground resistance, using Formula (8.13) of EN 1990.

(2) <RCM> The choice between MFA and RFA should conform to the appropriate Clause of this standard for the geotechnical structure for which ground improvement is provided.

(3) <RCM> The ultimate resistance of discrete ground improvement should be verified using the resistance factor approach, with:

- factors γ_F applied to actions according to Formula (8.4) of EN 1990; and
- factors γ_R applied to ground resistance, using Formula (8.13) of EN 1990.

NOTE 1. Values of the partial factors are given in Table 10.6 (NDP) for persistent and transient design situations unless the National Annex gives different values.

(2) <REQ> For discrete ground improvement the load distribution shall be calculated using representative material parameters.

(3) <RCM> The ultimate transverse resistance of discrete and diffused ground improvement should be verified using the material factor approach, with:

- factors γ_F applied to actions according to Formula (8.4) of EN 1990; and
- factors γ_M applied to ground properties according to Formula (8.12) of EN 1990; or

NOTE 1. Values of the partial factors are given in Table 10.6 (NDP) for persistent and transient design situations unless the National Annex gives different values.

Table 10.6 (NDP) – Partial factors for the verification of ultimate resistance of ground improvement for fundamental (persistent and transient) design situations

Verification of	Partial factor on	Symbol	Material factor approach (MFA)		Resistance factor approach (RFA)	
			(a)	(b)	(c)	(d)
Axial compressive resistance of diffused ground improvement	Actions and effects-of-actions[1]	γ_F and γ_E	DC1	DC3	Refer to other clauses as appropriate	
	Ground properties[2]	γ_M	Not factored			
	Total resistance	γ_t	Not factored			
Axial compressive resistance of discrete rigid inclusions	Actions and effects-of-actions[1]	γ_F and γ_E	Not Used		DC1	DC3
	Ground properties[2]	γ_M			Not factored	
	Bearing resistance of LTP	γ_R			Refer to Clauses 5 and 9	
	Overall system resistance	$\gamma_{R,sys}$			1.2	1.4 K_R
Transverse resistance of discrete and diffused ground improvement	Actions and effects-of-actions[1]	γ_F and γ_E	DC4	DC3	Not Used	
	Ground properties[2]	γ_M	M1	M3		
	Transverse resistance	γ_{Re}	Not factored			

[1]Values of the partial factors for Design Cases (DCs) 1, 3, and 4 are in EN 1990 Annex A.
[2]Values of the partial factors for Sets M1 and M3 are in EN 1997-1 Annex A.

(4) <REQ> When verification of the transverse resistance of discrete or diffused ground improvement using the material factor approach is carried out, both combinations (a) and (b) in Table 10.6 (NDP) shall be verified.

(5) <PER> If the resistance factor approach is used to verify axial resistance of discrete rigid inclusions then either combinations (c) or (d) in Table 10.6 (NDP) may be verified.

(6) <REQ> When improved ground is utilised to resist uplift, the lower characteristic value of bulk density shall be applied.

10.7 Serviceability limit states

(1) <RCM> The representative material property should be the mean value of test results in accordance with Formula 10.1 with $k_n = 0$.

(2) <REQ> Serviceability limit states of structures founded on ground improvement shall be verified according to Clauses 4, 5, or 6 by calculation or testing.

10.8 Execution

10.8.1 General

(1) <REQ> The execution of grouting shall conform to EN 12715.

(2) <REQ> The execution of jet grouting shall conform to EN 12716.

(3) <REQ> The execution of deep mixing shall conform to EN 14679.

(4) <REQ> The execution of ground treatment by deep vibration shall conform to EN 14731.

(5) <REQ> The execution of vertical drainage shall conform to EN 15237.

(6) <REQ> The execution of ground improvement techniques not listed above shall conform to an appropriate standard, as specified by the relevant authority or for a specific project with the relevant parties.

10.8.2 Execution design

(1) <REQ> The execution design shall be carried out in accordance with the relevant execution standard, specified in 10.8, and shall conform to EN 1997-1, 10.

(2) <REQ> The execution design shall:

- confirm the method of ground improvement to be adopted;
- set out the method of verification that the detailed design requirements have been met;
- set out any deviations from the detailed design requirements;
- set out the method of verification of the improved ground properties;
- set out the limits of deformation to be achieved during execution.

(3) <REQ> The execution design shall include a Supervision, Inspection, Monitoring and Maintenance plan in accordance with EN 1997-1, 10.

(4) <REQ> If, during execution design, it becomes apparent that the acceptance criteria for the ground improvement cannot be met then the design shall be revised.

10.8.3 Execution considerations for ground improvement

(1) <REQ> Where the selected technique does not have an execution standard listed in 10.8.1 then the requirements for the ground improvement shall be as specified by the relevant authority or for a specific project with the relevant parties.

(2) <RCM> The following items should also be considered in the execution design:

- the spacing of the inclusions in ground improvement groups;
- displacement and vibration of adjacent structures;
- the retarding influence of chemicals in the soil;
- soil compaction of displacement ground improvement inclusions;
- change in ground properties following installation.

(3) <REQ> The installation of any ground improvement shall not commence until the execution design as set out in 10.8.2 has been completed in accordance with the Detailed Design requirements and documented in the Geotechnical Design Report in accordance with EN 1997-1 Annex E.

(4) <REQ> Where the Observational Method has been selected, the Geotechnical Design Report shall set out how the detailed design requirements shall be controlled, monitored, and reviewed during execution.

(5) <REQ> The design shall be checked against the design acceptance criteria by determining the induced changes in the appropriate ground properties.

(6) <REQ> The required design acceptance criteria shall be set out in the Geotechnical Design Report.

(7) <REQ> The relationship between the design characteristic value of any parameter and the value obtained by testing of installed ground improvement inclusions shall be as set out in EN 1997-1 Formula (4.1) and Annex B.

10.8.4 Execution control

(1) <REQ> Execution control shall be as set out in the execution standard specified in 10.8.1.

(2) <REQ> Where no execution standard exists then the Geotechnical Design Report shall set out the method of execution control and it shall be included in the Execution Design Report.

10.8.5 Supervision

(1) <REQ> Supervision of execution design shall be by personnel experienced in the ground improvement being executed in accordance with the minimum requirements of EN 1997-1, Annex G, Table G.1.

10.8.6 Monitoring

(1) <REQ> The detailed design shall set out the monitoring requirements for the execution within a monitoring plan as set out in EN 1997-1, Annex E.

(2) <REQ> As a minimum the monitoring plan shall include the following:

- limits of movement and/or deformation required by the design. The limits shall be specified for both short term execution and long-term situations if applicable; and
- monitoring of other parameters or properties as required by the design.

(3) <RCM> Installation parameters for the ground improvement should be monitored and recorded either in real time using bespoke instrumentation or manually by site personnel.

10.8.7 Maintenance

(1) <REQ> Where the ground improvement is exposed to the effects of the environment, the detailed design shall set out the maintenance of the ground improvement to minimise deterioration and loss of design capacity.

NOTE 1. Some ground improvement, for example, jet grouted retaining walls can be exposed to freeze/thaw and so need to be protected.

10.9 Testing

10.9.1 General

(1) <REQ> Testing of ground improvement shall conform to the requirements of the execution standard specified in 10.8.1.

<Drafting Note>Clause (2) and Table 10.7 are under discussion. Comments are welcome.

(2) <REQ> The minimum frequency of testing shall be as given in Table 10.7 unless otherwise specified by the relevant authority or agreed for a specific project with the relevant parties.

Table 10.7 – Testing frequency for ground improvement

Ground Improvement Class	Area of ground improvement zone (m^2)	No. of tests*	
I and III	<900	Minimum 5	
	>900	Minimum 5 + 1 test per 625m^2	
II	**No of Inclusions**	Type A+	Type B+
	1 to 600	1 in 75	1 in 150
	601 to 2000	8 + 1 additional per 150 (maximum 16)	4 + 1 additional per 300 (maximum 8)
	>2000	16 + 1 additional per 250	8 + 1 additional per 500

*Type of control testing as required by the relevant execution standard or as specified by the relevant authority or for a specific project with the relevant parties.
+ Type A – Inclusions required for ULS, Type B Inclusions required only for SLS

<End of drafting note>

10.9.2 Investigation tests

(1) <REQ> Investigation tests shall conform to EN 1997-2.

NOTE 1. Investigation tests can be zone loading tests, dummy footings (or skip tests) or extraction and testing of samples from pre-contract trials.

(2) <RCM> For deep soil mixing, the preparation and testing of samples should be based on the Japanese Geotechnical Society Standard JGS 0821:2009 unless otherwise specified by the relevant authory or for a specific project with the relevant parties.

10.9.3 Control tests

(1) <REQ> Where ground improvement is to be installed within ground that contains natural or artificial chemicals or materials then additional control tests shall be carried out to ensure that the required improved ground properties are achieved.

(2) <PER> Control testing may be based on:

– laboratory testing of improved ground samples;

- laboratory testing of binders utilising groundwater;
- other testing to determine specific properties.

(3) <REQ> Where materials are to be used for which there is no European testing standard available then acceptance testing shall be carried out as specified by the relevant authority or for a specific project with the relevant parties.

10.10 Reporting

10.10.1 General

(1) <REQ> Reporting shall be carried out in accordance with EN 1997-1, 12 and Annex E.

(2) <REQ> Reporting shall be carried out in accordance with the the appropriate execution standard specified in 10.8.1.

10.10.2 Ground Investigation Report

(1) <REQ> The minimum information within the Ground Investigation Report shall conform to EN 1997-1, 12.2 and EN 1997-1, E.4.

(2) <REQ> The Ground Investigation Report shall contain any information required by the appropriate execution standard specified in 10.8.1.

10.10.3 Geotechnical Design Report

(1) <REQ> The Geotechnical Design Report shall conform to EN 1997-1, 12.3 and EN 1997-1, E.5.

(2) <REQ> The Geotechnical Design Report shall document all stages of progressive design in accordance with 10.2.5.

(3) <REQ> The Geotechnical Design Report shall provide a description of the ground improvement technique in accordance with EN 1997-1, 12.3.1.2.

(4) <REQ> Where the design includes the installation of rigid inclusions, the Geotechnical Design Report shall state if the rigid inclusion has been designed as a pile in accordance with Clause 6 or as discrete ground improvement in accordance with this Clause 10.

(5) <REQ> Where, as a result of calculation or other requirements, it is concluded that the inclusions are to be designed as piles or vice versa, then this shall be documented within the Geotechnical Design Report.

(6) <REQ> Where load or other testing is taken into account within the design, the Geotechnical Design Report shall contain the sources of information of this testing.

(7) <REQ> Each stage of design as set out in 10.2.5 shall be recorded and documented in the Geotechnical Design Report in accordance with EN 1997-1 Annex E.

(8) <REQ> The Geotechnical Design Report shall document the execution design.

(9) <REQ> The reporting of execution design shall specify:

- for diffused ground improvement, the extent of ground improvement (including upper and lower levels, depth, and inclinations if applicable) and in-situ improved properties;
- for discrete ground improvement, the locations, diameters or shapes, upper and lower levels, depth and inclinations if applicable and in-situ improved properties
- any restrictions applied by the design on sequence or other aspects of the execution;
- an Inspection and Testing plan that sets out the tolerances or improved properties required by the execution design and what procedures or testing has to be followed
- Monitoring plan that sets out the limits of deformations that are allowed during execution.

10.10.4 Geotechnical Construction Record

(1) <REQ>The Geotechnical Construction Record shall comply with EN 1997-1, E.6.

Annex A

(informative)

Slopes, cuttings, and embankments

A.1 Use of this Informative Annex

(1) This Informative Annex provides additional guidance to that given in Clauses 4 regarding existing slopes (within the zone of influence of construction activities or structures), cuttings, and embankments.

NOTE 1. National choice on the application of this Informative Annex is given in the National Annex. If the National Annex contains no information on the application of this informative annex, it can be used.

A.2 Scope and field of application

(1) This Annex covers calculation methods for the stability of:

- soil slopes;
- rock masses.

A.3 Calculation methods for analysing the stability of soil slopes

(1) <RCM> A calculation method for analysing the stability of soils slopes should only be used if it is appropriate for the Ground Model, potential failure surface, and loading conditions.

NOTE 1. Table A.1 provides a non-exhaustive list of calculation methods for soil slopes based on limiting equilibrium.

NOTE 2. Procedures for numerical methods are given in EN 1997-1, 8.3.

(2) <PER> Three-dimensional effects may be considered when using a two-dimensional calculation method, provided the adjustment is on the safe side and the method is validated.

(3) <RCM> When choosing a calculation method for analysing the stability of soil slopes, the following should be included in the Geotechnical Design Model:

- weight density determined using the single source principle (see EN 1990, 6.1.1(5));
- soil layering;
- occurrence and orientation of zones or layers of low strength;
- seepage and groundwater pressure distribution;
- drained or undrained behaviour or a combination of both;
- creep deformations due to shear;
- type of anticipated failure;
- possibility of progressive failure along the slip surface (strain compatibility);
- external actions and their duration and direction;
- use of stabilizing measures;

– adjacent or intersecting structures.

Table A.1 – Calculation methods for analysing the stability of soil slopes

No[c]	Method	Type of method[a,b]	Special design conditions/limitations	Comments, assumptions
1	Bishop (simplified and rigorous)	Slices, circular arc	Not recommended with external horizontal loads	Simplified ignores interslice shear forces with interslice forces are horizontal
2	Generalized limit equilibrium	Slices, any shape of surface	Applicable with all slope geometries and soil profiles	
3	Janbu generalized (modified)	Slices, circular arc, non-circular, polyline		Location of interslice normal force is assumed by a line of thrust
4	Morgenstern-Price			Direction of interslice forces by variable user function
5	Spencer			Constant interslice forces function
6	Sarma	Slices, polyline	Seismic loading, critical acceleration. Static conditions: horizontal load set to zero	Can include non-vertical slices and multi-wedge failure mechanisms
7	Block/wedge method	Multiple body, polyline	Pre-defined planar failure surface. Divided into three segments	Earth-pressure can be used as driving and resisting force. No moment equilibrium
8	Multiple wedge method	Multiple body, plane surfaces, blocks, wedges		No moment equilibrium.
9	Infinite slope	Single body, plane surface	Long shallow slopes	
10	Culmann, finite slope		Steep slopes, drained analysis	
11	Logarithmic spiral	Single body; logarithmic spiral	Homogeneous soil, drained analysis	No moment equlibrium

[a]Where ground or embankment material is relatively homogeneous and isotropic, circular failure surfaces can normally be assumed, except when high external loads are present
[b]polyline includes interconnected plane surfaces
[c]references to the methods are listed in the Bibliography

A.4 Calculation methods for analysing the stability of rock masses

<Drafting NOTE>PT6 to develop further</NOTE>

(1) <RCM> A calculation method for analysing the stability of rock masses should only be used if it is appropriate for the Ground Model, potential failure surface, and loading conditions.

NOTE 1. Table A.2 provides a non-exhaustive list of calculation methods for rock masses based on limiting equilibrium.

(2) <RCM> When choosing a calculation method for analysing the stability of rock masses, the following should be included in the Geotechnical Design Model:

- occurrence and orientation of discontinuities;
- infilled discontinuities;
- seepage and groundwater pressure distribution;
- type of anticipated failure;
- external actions and their duration and direction;
- use of stabilizing measures;
- adjacent or intersecting structures;

Table A.2 – Calculation methods for analysing the stability of rock masses

No.	Type of failure	Method	Special design conditions/limitations	Comments, assumptions
1	Circular failure	Bishop, Janbu, Morgenstern, Spencer	Blocky or weathered rock mass. Tension crack with or without water	Method of slices, circular: See Table 4.1
2	Plane failure		Tension crack with or without water	Plane surface, blocks
3	Wedge failure		Tension crack with or without water	Wedge
4	Block toppling			Blocks
5	Flexure toppling			Columns
6	Block-flexure toppling			Blocks and columns
7	Secondary toppling			
8	Rock fall			

Annex B

(informative)

Spread foundations

B.1 Use of this Informative Annex

(1) This Informative Annex provides additional guidance to that given in Clause 5 regarding spread foundations.

NOTE 1. National choice on the application of this Informative Annex is given in the National Annex. If the National Annex contains no information on the application of this informative annex, it can be used.

B.2 Scope and field of application

(1) This Annex covers:

- checklists;
- calculation models for bearing resistance;
- calculation models for foundation settlement.

B.3 Checklists

(1) <POS> The following features can affect the resistance of a bearing stratum:

- depth of the adequate bearing stratum;
- inclination of the adequate bearing stratum;
- depth above which shrinkage and swelling of clay soils, due to seasonal weather changes, or to trees and shrubs, can cause appreciable movements;
- depth above which frost damage, including heave due to groundwater freezing, can occur;
- potential problems if an excavation is made below the level of the water table in the ground;
- ground movements and reductions in the resistance of the bearing stratum by seepage or climatic effects or by construction procedures;
- excavations for services close to the foundation potentially causing bearing failure or foundation movement beyond a serviceability limit state;
- high or low temperatures transmitted from the building;
- scour;
- variation of water content due to long periods of drought, and subsequent periods of rain, on the properties of volume-unstable soils in arid climatic areas;
- the presence of soluble materials, e.g. limestone, claystone, gypsum, salt rocks.

(2) <POS> The following features of rock can affect the design of spread foundations on rock:

- deformability and strength of the rock mass and the permissible settlement of the supported structure;
- presence of any weak layers, for example solution features or fault zones, beneath the foundation;

- presence of bedding joints and other discontinuities and their characteristics (for example filling, continuity, width, spacing);
- state of weathering, decomposition and fracturing of the rock;
- disturbance of the natural state of the rock caused by construction activities, such as, for example, underground works or slope excavation, being near to the foundation.

B.4 Calculation model for bearing resistance using soil parameters

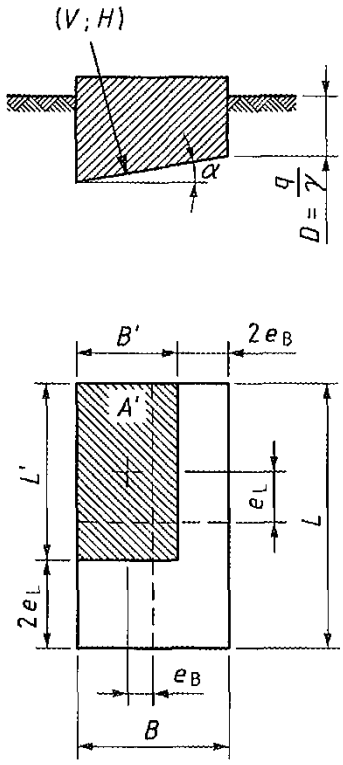

Figure B.1 – Notation used in calculation model for bearing resistance using soil parameters

<Drafting NOTE: figure to be redrawn, *V* to be replaced by *N*, *H* to be replaced by *T*; ground to be shown sloping down at angle ω to the horizontal on one side>

(1) <PER> The undrained bearing resistance factors in Formula (5.4) may be determined from Formula (B.1):

$$N_{cu} = \pi + 2$$
$$N_{\gamma u} = -2 \sin \omega \qquad \text{(B.1)}$$

where:

ω is the slope of the ground surface, downwards from the edge of the foundation.

(2) <PER> The following non-dimensional factors may be used in Formula (5.4):

- base factor b_{cu};
- depth factor d_{cu};

- ground inclination factor g_{cu};
- load inclination factor i_{cu};
- shape factor s_{cu}.

(3) <PER> The non-dimensional factors in (2) may be calculated from Formula (B.2):

$$b_{cu} = 1 - \frac{2\alpha}{\pi + 2}$$

$$d_{cu} = 1 + 0{,}33\tan^{-1}\left(\frac{D}{B}\right)$$

$$g_{cu} = 1 - \frac{2\omega}{\pi + 2} \qquad \text{(B.2)}$$

$$i_{cu} = \frac{1}{2}\left(1 + \sqrt{1 - \frac{T}{A'c_u}}\right), T \leq A'c_u$$

$s_{cu} = 1 + 0{,}2\left(\frac{B'}{L'}\right)$ for a rectangular foundation or 1,2 for circular foundation

where:

α is the inclination of the foundation base (in radians);

D is the depth of the foundation;

B is the breadth of the foundation;

ω is the inclination of the ground surface, downwards from the edge of the foundation (in radians);

B' is the effective breadth of the foundation;

L' is the effective length of the foundation;

T is the force applied tangentially to the base of the foundation;

A' is the foundation's effective area on plan;

c_u is the soil's undrained shear strength,

NOTE 1. d_{cu} should be taken as 1.0 when the strength of the soil above the foundation depth D is less than that at foundation level.

(4) <PER> The drained bearing resistance factors in Formula (5.7) may be determined from Formula (B.3):

$$N_q = e^{\pi tan\varphi'}\tan^2\left(45 + \frac{\varphi'}{2}\right) \qquad \text{(B.3)}$$

$N_c = (N_q - 1)cot\varphi'$

$N_{\gamma u} = 2(N_q + 1)\tan\varphi'$ for a rough base (i.e. $\delta \geq \varphi'/2$)

where:

φ' is the soil's angle of internal shearing resistance;

δ Is the angle of interface friction betyween the foundation and the ground.

(5) <PER> The following non-dimensional factors may be used in Formula (5.8):

- base factors b_c, b_q, and b_γ;
- depth factors d_c, d_q, and d_γ;
- ground inclination factors g_c, g_q, and g_γ;
- load inclination factors i_c, i_q, and i_γ;
- shape factors s_c, s_q, and s_γ.

(6) <PER> The non-dimensional factors in (5) may be calculated from Formula (B.4):

$$b_c = b_q - \left(\frac{1 - b_q}{N_c \tan\varphi'}\right); b_q = b_\gamma = 1 - \alpha \tan\varphi'$$

$$d_c = d_q - \left(\frac{1 - d_q}{N_c \tan\varphi'}\right); d_\gamma = 1$$

$$d_q = 1 + 2\tan\varphi'\,(1 - \sin\varphi')^2 (D/B) \text{ for } D/B \leq 1.0$$

$$d_q = 1 + 2\tan\varphi'\,(1 - \sin\varphi')^2 \tan^{-1}(D/B) \text{ for } D/B > 1.0$$

$$g_c = g_q - \left(\frac{1 - g_q}{N_c \tan\varphi'}\right) = \left(\frac{g_q N_q - 1}{N_q - 1}\right); g_q = g_\gamma = 1 - \tan\omega$$

$$i_c = i_q - \left(\frac{1 - i_q}{N_c \tan\varphi'}\right) = \left(\frac{i_q N_q - 1}{N_q - 1}\right); i_q = \left(1 + \frac{T}{N}\right)^m; i_\gamma = \left(1 + \frac{T}{N}\right)^{m+1} \qquad \text{(B.4)}$$

$m = m_B = \frac{2 + (B'/L')}{1 + (B'/L')}$ when T acts in the direction of B'

$m = m_L = \frac{2 + (L'/B')}{1 + (L'/B')}$ when T acts in the direction of L'

$$s_c = \left(\frac{s_q N_q - 1}{N_q - 1}\right)$$

$s_q = 1 + \left(\frac{B'}{L'}\right)\sin\varphi'$ for a rectangular or circular ($B' = L'$) foundation

$s_\gamma = 1 - 0.3\left(\frac{B'}{L'}\right)$ for a rectangular or circular ($B' = L'$) foundation

where, in addition to the symbols defined for (B.2):

φ' is the soil's angle of internal shearing resistance;

N is the force applied normally to the base of the foundation;

θ is the angle of the tangential load from the direction of L'.

NOTE 1. d_c, d_q, and d_γ should be taken as 1.0 when the strength of the soil above the foundation depth D is less than that at foundation level.

(7) <RCM> To account for the groundwater level in Formula 5.7 and assuming there is no seepage, the following values for q and γ' should be adopted:

- for groundwater level at ground surface: $q = \gamma D_w + (\gamma - \gamma_w)(D - D_w)$ and $\gamma' = (\gamma - \gamma_w)$l
- for groundwater below ground surface but above the foundation base: $q = \gamma D_w + (\gamma - \gamma_w)(D - D_w)$ and $\gamma' = (\gamma - \gamma_w)$
- for groundwater below the foundation base: $q = \gamma D$ and $\gamma' = \gamma$.

B.5 Calculation model for bearing resistance on ground underlain by a weaker layer

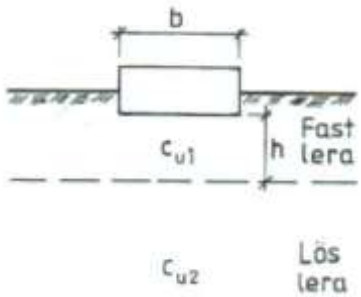

Figure B.2 – Foundation on a stronger layer over a weaker layer

<Figure to be edited: h to be changed to D_1>

(1) <PER> The undrained bearing resistance R_{Nu} of a rectangular spread foundation founded on a stronger fine soil layer above a weaker fine soil layer may be determined from Formula (B.5):

$$R_{Nu} = A'(k_1 c_{u1} N_{cu} b_{cu} s_{cu} i_{cu} + q)$$

$$k_1 = \frac{c_{u2}}{c_{u1}}\left(1 + \frac{D}{B}\right)\left(1 + \frac{D_1}{L}\right) \leq 1.0 \qquad \text{(B.5)}$$

where:

c_{u1} is the undrained strength of the upper (stronger) layer;

c_{u2} is the undrained strength of the lower (weaker) layer;

D_1 is the thickness of the upper layer below the base of the foundation.

NOTE 1. This formula assumes that the stress from the foundation spreads at a rate of 1 horizontal to 2 vertical through the stronger layer.

(2) <PER> The drained bearing resistance R_N of a rectangular spread foundation founded on a stronger coarse soil layer above a weaker fine soil layer may be determined from Formula (B.6):

$$R_{\mathrm{Nu}} = A\left(1+\frac{0.2B}{L}\right)(\pi+2)c_{\mathrm{u2}} + A'\left(\gamma_1' {D_1}^2\right)\left(1+\frac{2D}{D_1}\right)\left(\frac{K_{\mathrm{ps}} tan\varphi_1{}'}{B}\right) + A'\gamma_1 D$$

$$\lambda = \frac{q_2}{q_1} = \frac{(\pi+2)c_{\mathrm{u2}}}{0.5\gamma_1{}'BN_\gamma} \qquad \text{(B.6)}$$

where:

φ'_1 is the drained angle of internal shearing resistance of the upper coarse soil layer;

c_{u2} is the undrained strength of the lower fine soil layer;

D_1 is the thickness of the upper layer;

λ is the ratio of the bearing pressure in the lower layer (q_2) to that in the upper layer (q_1);

q_2 is the bearing pressure in the lower layer;

γ'_1 Is the effective weight density of the upper layer;

K_{ps} is a punching shear coefficient given in Table B5.1.

Table B.5.1. Values of the punching shear coefficient K_{ps}

$\lambda = q_2/q_1$	φ'_1				
	20°	**25°**	**30°**	**35°**	**40°**
0	0.7	0.9	1.0	1.4	2.2
0.2	1.5	1.8	2.2	3.1	5.1
0.4	2.4	2.9	3.4	4.8	7.0
1.0	3.2	4.1	5.5	8.1	12.5

B.6 Calculation model for bearing resistance from pressuremeter test results

(1) <PER> The bearing resistance R_N of a spread foundation to normal loads may be determined from the result of Ménard Pressuremeter Tests using Formula (B.7):

$$R_{\mathrm{N}} = A'\left(\sigma_{\mathrm{v0}} + k(p_{\mathrm{LM}} - p_0)\right)$$

$$p_0 = K_0(\sigma_{\mathrm{v0}} - u) + u \qquad \text{(B.7)}$$

where:

A' is the effective area of the foundation on plan;

σ_{v0} is the total (initial) vertical stress at the level of the foundation base;

k is a bearing resistance factor given in Table B.1;

p_{LM} is the representative value of the Ménard limit pressures at the base of the spread foundation;

p_0 is the total (initial) stress at the level of the foundation base;

K_0 is the at-rest earth pressure coefficient;

u is the groundwater pressure at the level of the Ménard Pressuremeter Test.

NOTE 1. The value of k can vary between 0,8 to 3,0 depending on the type of soil, the embedment depth and the shape of the foundation.

Table B.1 – Correlations for deriving the bearing resistance factor *k* for spread foundations

Soil category	p_{LM} category	p_{LM} (MPa)	k
Clay and silt	A B C	<0,7 1,2–2,0 >2,5	$0{,}8[1 + 0{,}25\,(0{,}6 + 0{,}4\,B/L) \cdot D_e/B]$ $0{,}8[1 + 0{,}35\,(0{,}6 + 0{,}4\,B/L) \cdot D_e/B]$ $0{,}8[1 + 0{,}50\,(0{,}6 + 0{,}4\,B/L) \cdot D_e/B]$
Sand and gravel	A B C	<0,5 1,0–2,0 >2,5	$[1 + 0{,}35\,(0{,}6 + 0{,}4\,B/L) \cdot D_e/B]$ $[1 + 0{,}50\,(0{,}6 + 0{,}4\,B/L) \cdot D_e/B]$ $[1 + 0{,}80\,(0{,}6 + 0{,}4\,B/L) \cdot D_e/B]$
Chalk			$1{,}3[1 + 0{,}27\,(0{,}6 + 0{,}4\,B/L) \cdot D_e/B]$
Marl and weathered rock			$[1 + 0{,}27\,(0{,}6 + 0{,}4\,B/L) \cdot D_e/B]$

NOTE 1. See French Ministère de l'Equipement du Logement et des Transport (1993) for additional information and examples.

B.7 Calculation model for settlement evaluation based on adjusted elasticity method

(1) <PER> The total settlement s of a foundation on fine or coarse soil may be determined from Formula (B.8):

$$s = \frac{pBf}{E_m} \tag{B.8}$$

where:

p is the bearing pressure linearly distributed on the base of the foundation;

B is the breadth of the foundation;

f is a settlement coefficient;

E_m is the mean value of the modulus of elasticity.

NOTE 1. The value of the settlement coefficient f depends on the shape and dimensions of the foundation area, the variation of stiffness with depth, the thickness of the compressible formation, Poisson's ratio, the distribution of the bearing pressure and the point for which the settlement is calculated.

(2) <PER> If no useful settlement results, measured on neighbouring similar structures in similar conditions are available, the design drained modulus E_m of the deforming stratum for drained conditions may be estimated from the results of laboratory or in-situ tests.

(3) <RCM> The adjusted elasticity method should only be used if the stresses in the ground are such that no significant yielding occurs and if the stress-strain behaviour of the ground may be considered to be linear.

NOTE 1. Great caution is required when using the adjusted elasticity method in the case of non-homogeneous ground.

B.8 Calculation model for settlement evaluation based on stress-strain method

(1) <PER> The total settlement of a foundation on fine or coarse soil may be evaluated using the stress-strain calculation method as follows:

- computing the stress distribution in the ground due to the loading from the foundation; this may be derived on the basis of elasticity theory, generally assuming homogeneous isotropic soil and a linear distribution of bearing pressure;
- computing the strain in the ground from the stresses using stiffness moduli values or other stress-strain relationships determined from laboratory tests (preferably calibrated against field tests), or field tests;
- integrating the vertical strains to find the settlements; to use the stress-strain method a sufficient number of points within the ground beneath the foundation should be selected and the stresses and strains computed at these points.

B.9 Calculation model for settlements without drainage

(1) <PER> The short-term components of settlement of a foundation, which occur without drainage, may be evaluated using either the stress-strain method or the adjusted elasticity method. The values adopted for the stiffness parameters (such as E_m and Poisson's ratio) should in this case represent the undrained behaviour.

B.10 Calculation model for settlements caused by consolidation

(1) <PER> To calculate the settlement caused by consolidation, a confined one-dimensional deformation of the soil in an oedometer test may be assumed and the consolidation test curve may then be used. Addition of settlements in the undrained and consolidation state often leads to an overestimate of the total settlement, and empirical corrections may be applied.

B.11 Calculation model for time-settlement behaviour

(1) <PER> With fine soils the rate of consolidation settlement before the end of the primary consolidation may be estimated by using consolidation parameters obtained from a laboratory

compression test. However, the rate of consolidation settlement should preferably be obtained using permeability values obtained from in-situ tests

B.12 Calculation model for settlement evaluation using pressuremeter test results

(1) <PER> The settlement of a spread foundation may be calculated from the results of a Ménard pressuremeter tests using the Formula (B.9):

$$s = (q - \sigma_{v0}) \left[\frac{2B_0}{9E_d} \left(\frac{\lambda_d B}{B_0} \right) + \frac{\alpha_r \lambda_c B}{9E_c} \right] \quad \text{(B.9)}$$

where:

B_o is a reference width of 0,6 m;

B is the width of the foundation;

λ_d, λ_c are shape factors given in Table B.2;

α_r is a rheological factor given in Table B.3;

E_c is the weighted value of E_M immediately below the foundation;

E_d is the harmonic mean of E_M in all layers up to 8 × B below the foundation;

σ_{v0} is the total (initial) vertical stress at the level of the foundation base;

q is the design normal pressure applied on the foundation.

Table B.2 – Shape coefficients for settlement of spread foundations

L/B	Circle	Square	2	3	5	20
λ_d	1	1,12	1,53	1,78	2,14	2,65
λ_c	1	1,1	1,2	1,3	1,4	1,5

Table B.3 – Correlations for deriving the rheological factor for spread foundations

Type of ground	Description	E_M/p_{LM}	α_r
Peat			1
Clay	Over-consolidated Normally consolidated Remoulded	> 16 9 - 16 7 - 9	1 0,67 0,5
Silt	Over-consolidated Normally consolidated	> 14 5 - 14	0,67 0,5
Sand		> 12 5 - 12	0,5 0,33
Sand and gravel		> 10 6 - 10	0,33 0,25
Rock	Extensively fractured Unaltered Weathered		0,33 0,5 0,67

NOTE 1. See French Ministère de l'Equipement du Logement et des Transport (1993).

B.13 Presumed bearing resistance for strip foundations on soil and fill.

(1) <PER> When the conditions in 5.6.4.3(2) apply, the presumed bearing resistance of strip foundations on coarse soil and fill may be determined from Table B.4, provided:

- the foundation's effective breadth is between 0,5 and 2,0 m;
- the foundation's embedment depth is between 0,5 and 2,0m;
- the ground conditions comply with Table B.5.

Table B.4 – Presumed bearing resistance pressure (in kPa) for strip foundations on coarse soil and fill subject to the conditions in Table B.5

Embedment depth (m)	Effective foundation width, *B'* (m)					
0,5	0,5	1,0	1.5	2,0	2,5	3,0
1,0	200	300	330	280	250	220
1,5	270	370	360	310	270	240
2,0	340	440	390	340	290	260
2,5	400	500	420	360	310	280
For foundations with embedment depths 0,3 m ≤ *D* ≤ 0,5 m and effective widths *B'* ≥ 0,3 m	150					

Table B.5 – Ground conditions for application of Table B.4 for coarse soil and fill

Soil group/ classification[a]	Uniformity coefficient[b], $C_{U,PSD}$	Mean density index[c], I_d	Mean relative degree of compaction in accordance with Proctor density	Mean CPT resistance, q_c (MN/m²)
At least medium dense uniformly graded SANDS and GRAVELS	≤ 3	≥ 30%	≥ 95 %	≥ 7,5
At least medium dense poorly, medium, well and gap graded SANDS and GRAVELS	≤ 3	≥ 45%	≥ 98 %	≥ 7,5
[a]See ~~DIN 18196~~ EN ISO 14688; [b]See EN ISO 14688-2:2018, 4.3; [c]See EN ISO 14688-2:2018, 5.2;				

(2) <PER> The presumed bearing resistance of strip foundations on mixed soils (sands and gravels) may be determined from Table B.6, provided:

- the foundation's effective breadth is between 0,5 and 2,0 m;
- the foundation's embedment depth is between 0,5 and 2,0m;
- the soil's fines contents (according to EN ISO 14688-2) is between 5 and 40%.

Table B.6 – Presumed bearing resistance pressure (in kPa) for strip foundations on mixed soils

Embedment depth (m)	Average soil consistency		
	Stiff (I_C = 0,75–1,0)	Very stiff (I_C ≈ 1,0–1,25)	Hard (I_C > 1,25)
0,5	150	220	330
1,0	180	280	380
1,5	220	330	440
2,0	250	370	500
$q_{u,rep}$ (MPa)[a]	120 to 300	300 to 700	> 700
[a]Mean representative unconfined compressive strength			

(3) <PER> The presumed bearing resistance of strip foundations on fine soils may be determined from Table B.7, provided:

- the foundation's effective breadth is between 0,5 and 2,0 m;
- the foundation's embedment depth is between 0,5 and 2,0m;
- the soil's classification is SiM, ClL, or ClM (according to EN ISO 14688-2).

Table B.7 – Presumed bearing resistance pressure (in kPa) for strip foundations on fine soils

Embedment depth (m)	Average soil consistency		
	Stiff (I_C = 0,75–1,0)	Very stiff ($I_C \approx$ 1,0–1,25)	Hard (I_C > 1,25)
0,5	120	170	280
1,0	140	210	320
1,5	160	250	360
2,0	180	280	400
$q_{u,rep}$ (kPa)[a]	120 to 300	300 to 700	> 700
[a]Mean representative unconfined compressive strength			

(4) <PER> The presumed bearing resistance of strip foundations on fine soils may be determined from Table B.8, provided:

- the foundation's effective breadth is between 0,5 and 2,0 m;
- the foundation's embedment depth is between 0,5 and 2,0m;
- the soil's classification is ClV (according to EN ISO 14688-2).

Table B.8 – Presumed bearing resistance pressure (in kPa) for strip foundations on clay soils

Embedment depth (m)	Average soil consistency		
	Stiff (I_C = 0,75–1,0)	Very stiff ($I_C \approx$ 1,0–1,25)	Hard (I_C > 1,25)
0,5	90	140	200
1,0	110	180	240
1,5	130	210	270
2,0	150	230	300
$q_{u,rep}$ (kPa)[a]	120 to 300	300 to 700	> 700
[a]Mean representative unconfined compressive strength			

B.14 Calculation model for deriving presumed bearing resistance on rock

(1) <PER> For rocks with tight joints, including chalk with porosity less than 35 %, the presumed bearing resistance may be derived from Figure B.3.

NOTE 1. This is based on the grouping given in Table B.9 with the assumption that the structure can tolerate settlements equal to 0,5 % of the foundation width.

(2) <PER> Values of presumed bearing resistance for other settlements may be derived by direct proportion.

(3) <RCM> For broken rocks with open or infilled joints, reduced values of presumed bearing pressure should be used.

Table B.9 – Grouping of rock types

Group	Type of rock
1	Pure limestones and dolomites Carbonate sandstones of low porosity
2	Igneous Oolitic and marly limestones Well cemented sandstones Indurated carbonate mudstones Metamorphic rocks, including slates and schist (flat cleavage/foliation)
3	Very marly limestones Poorly cemented sandstones Slates and schists (steep cleavage/foliation)
4	Uncemented mudstones and shales

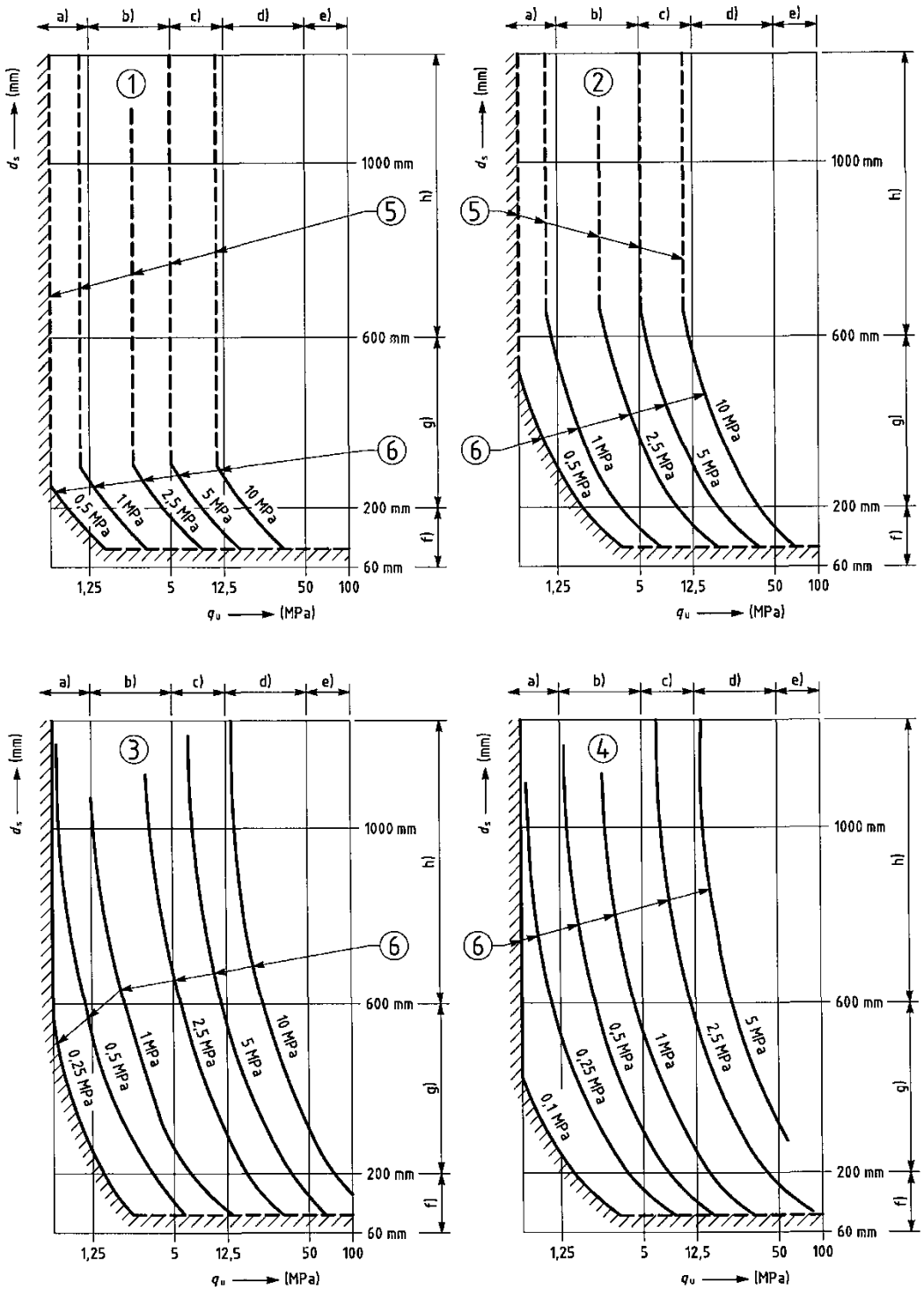

Figure B.3 - Presumed bearing resistance pressure for square spread foundations bearing on rock for settlements not exceeding 0,5 % of foundation width

Annex C

(informative)

Piled foundations

C.1 Use of this Informative Annex

(1) This Informative Annex provides additional guidance to that given in Clause 7 regarding piled foundations.

NOTE 1. National choice on the application of this Informative Annex is given in the National Annex. If the National Annex contains no information on the application of this informative annex, it can be used.

C.2 Scope and field of application

(1) This Annex covers:

- examples of pile types in different classes;
- example of the difference between pile groups and piled rafts;
- examples of piles used for settlement reduction, piled embankments, and piles with load transfer platforms;
- method for the determination of the coefficient of variation;
- calculation model for pile bearing capacity based on ground parameters;
- calculation model for pile bearing capacity based on CPT profiles;
- calculation model for pile bearing capacity based on PMT profiles;
- calculation model for pile bearing capacity based on empirical tables;
- calculation model for downdrag (vertical ground movements);
- calculation model for transverse ground movements;
- calculation model for a pile block subject to axial compression loads;
- calculation model for a pile block subject to axial tension loads;
- calculation model for pile buckling and second order effects;
- calculation model for single pile settlement using load transfer functions;
- calculation model for pile group settlement assuming an equivalent raft.

C.3 Examples of pile types

NOTE 1. Examples of pile types classified according to Table 6.1 are given in Table C.1.

Table C.1 – Examples of pile types in different classes

Pile type	Class	Example pile types
Displacement piles	High	Driven cast-in-place concrete piles Solid section precast concrete piles Closed-ended tubular steel piles Closed-ended tubular precast concrete piles Open-ended tubular steel piles when plugged Open-ended tubular precast concrete piles when plugged Timber piles
	Low	Continuous helical displacement piles (also known as displacement auger piles) Cast-in-place concrete screw piles Open-ended tubular steel piles Steel sheet piles Steel H-section piles
Replacement piles	CFA	Bored cast-in-place piles installed using continuous flight auger Micropiles
	Bored	Bored cast-in-place concrete piles with or without temporary casing Caissons excavated by hand or by machine Barrettes Diaphragm walls
Other	High	Steel helical piles

C.4 Example of the difference between pile groups and piled rafts

<Drafting Note: Add a description and figure to illustrate the difference between pile groups and piled rafts>

C.5 Example of piles used for settlement reduction, piled embankments, and piles with load transfer platforms

<Drafting Note: Add a description and figure to illustrate the difference between piles used for settlement reduction, piled embankments and piles used together with a load transfer platform>

C.6 Method for the determining the coefficient of variation

(1) <PER> For design verification using calculation Method B (Model Pile Method), provided each profile relates to a similar pile type, geometry, loading and ground conditions, the bearing capacity R_i may be calculated for n individual profiles to form a single data set.

(2) <RCM> Based on n profiles, the average pile bearing capacity R_{av} should be determined from Formula (C.1):

$$R_{\text{av}} = \frac{\sum_{i=1}^{n} R_i}{n} \tag{C.1}$$

where:

R_i is the pile bearing capacity calculated for each individual profile i;

n is the total number of profiles within the current data set.

(3) <RCM> The standard deviation s for n individual estimates of bearing capacity should be determined from Formula (C.2):

$$s = \sqrt{\frac{\sum_{i=1}^{n}(R_i - R_{\text{av}})^2}{n-1}} \tag{C.2}$$

(7) <RCM>The coefficient of variation CoV should be determined from Formula (C.3):

$$CoV = \frac{s}{R_{\text{av}}} \tag{C.3}$$

C.7 Calculation model for pile bearing capacity based on ground parameters

<Drafting Note: Add a description and Formulae to illustrate the calculation method based on ground parameters derived from field or laboratory testing>

C.8 Calculation model for pile bearing capacity based on CPT profiles

<Drafting Note: Add a description and Formulae to illustrate the calculation method based on field testing using CPT profiles [D7 from existing EN 1997-2]>

C.9 Calculation model for pile bearing capacity based on PMT profiles

<Drafting Note: Add a description and Formulae to illustrate the calculation method based on field testing using PMT profiles [Ménard Pressuremeter E3 from existing EN 1997-2]>

C.10 Calculation model for pile bearing capacity based on empirical tables

<Drafting Note: Add a description and Formulae to illustrate the calculation method based on published empirical tables. [D6 from existing EN 1997-2]>

C.11 Calculation model for downdrag due to vertical ground movements

a) General

(1) <PER> Downdrag (or negative shaft friction) may be regarded as the development of a variable action D_{rep}, or drag load, resulting from relative movement between settling ground and the pile shaft where the ground settlement s_{gr} exceeds the pile settlement s_{p}.

(2) <POS> Settlement of the pile will continue until the combination of the permanent and variable actions from the overlying structure together with the variable drag load achieve equilibrium with the mobilised pile resistance R_c (end bearing R_b and supporting shaft friction R_s).

(3) <RCM> Negative shaft friction should be considered under both serviceability and ultimate limit state conditions and D_{rep} should be estimated for the relevant pile loading and a calculation model taking account of appropriate strain mechanisms between the pile and the surrounding fill or soil.

b) Rigorous interaction model for downdrag

(1) <POS> An appropriate rigorous model to calculate negative shaft friction is to identify a neutral plane marking the boundary between positive and negative shaft friction (see Figure C.1).

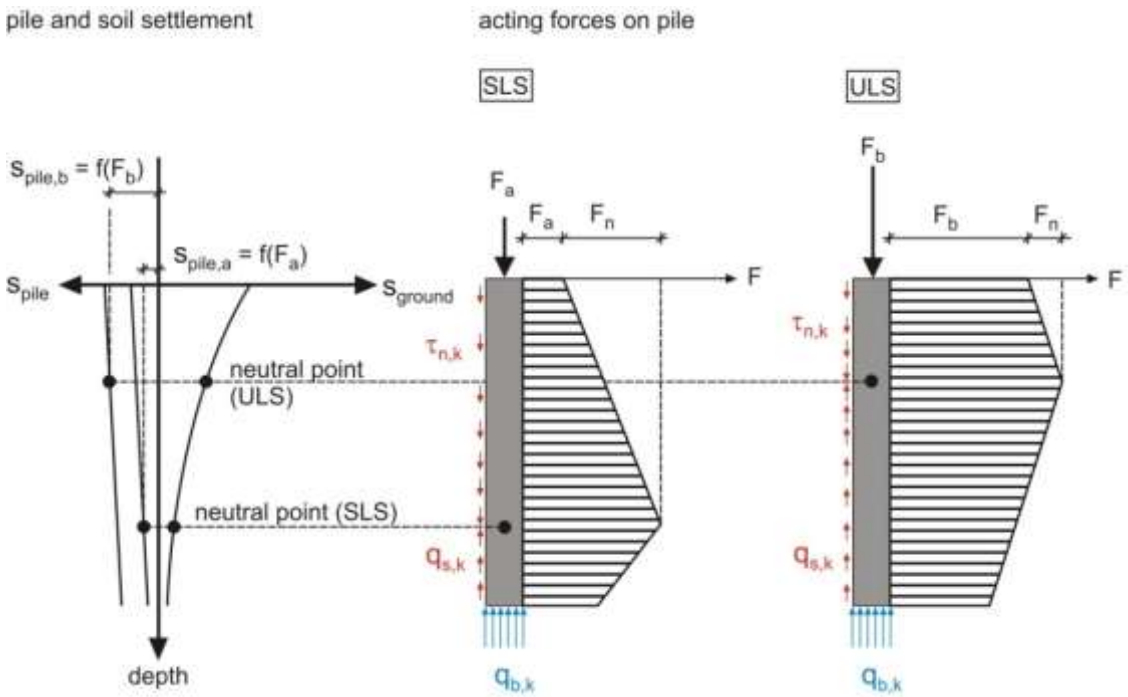

Figure C.1 – Stress distribution for assessment of negative shaft friction

<Drafting Note: Figure to be redrawn and symbols updated to be consistent with Clause 6>

(2) <POS> The neutral plane will be at a different level for SLS or ULS conditions, but in both cases, corresponds to the level at which the settlement of the pile s_p and the surrounding ground s_{gr} are equal. For the ULS case, the neutral plane will be at a higher level compared to that for the SLS case.

(3) <RCM> The settlement profile in the ground at any particular time under consideration should be estimated based on the anticipated changes in effective stress in the ground, ground stiffness and the depth of the compressible ground. The settlement of the ground should include immediate and primary consolidation settlement, together with any secondary consolidation (creep).

(4) <PER> The settlement of the pile s_p at any particular time under consideration may be estimated using elastic theory, load transfer functions, empirical relationships, numerical analysis or other suitable method taking account of the stress distribution.

(5) <RCM> The effect of the downdrag should be modelled by carrying out an interaction analysis to determine the depth of the neutral plane L_{dd} corresponding to the point where the pile settlement s_p equals the ground settlement s_{gr}.

(6) <RCM> The equivalent drag force D_{rep} should be determined from Formula (C.4):

$$D_{rep} = \pi D \int_0^{L_{dd}} \tau_s \cdot dz \tag{C.4}$$

where:

D Is the diameter of the pile for circular piles or equivalent diameter for non-circular piles;

τ_s is the unit shaft friction at depth z;

L_{dd} is the depth to the neutral plane.

<Drafting Note: PT4 requests guidance on the best way to present the idea that downdrag and variable loads do not need to be considered in combination. The initial idea was as follows:

(7) <RCM> The design value of the action effects for serviceability limit state verifications should be determined from Formula (C.5):

$$F_{cd} = G_{rep} + Q_{rep} + D_{rep,SLS} \tag{C.5}$$

... the alternative is more rigorous (based on EN 1990):

$$F_{cd} = max \begin{cases} \sum_{i\geq1} G_{k,i} + \sum_{j\geq1} \psi_{0,j} Q_{k,j} \\ \sum_{i\geq1} G_{k,i} + D_{rep,SLS} \end{cases} \tag{C.5b}$$

where:

G_{rep} is the representative permanent structural action;

Q_{rep} is the representative variable structural action;

$D_{rep,SLS}$ is the equivalent drag force over the depth of ground above the neutral plane under serviceability conditions.

(8) <RCM> The drag force due to moving ground D_{rep} under ultimate conditions should be classified as a permanent action and combined with other structural actions in accordance with EN 1990, 8.3.7 and A.1.

(9) <RCM> The design value of the effects of actions for ultimate limit state verifications should be determined from Formula (C.6):

<Drafting Note: As for SLS, PT4 requests guidance on the best way to present the idea that downdrag and variable loads do not need to be considered in combination. The initial idea was as follows:

$$F_{cd} = \gamma_G G_{rep} + \psi_0 \gamma_Q Q_{rep} + \gamma_{F,drag} D_{rep,ULS} \quad \text{(C.6)}$$

... the alternative is more rigorous (based on EN 1990):

$$F_{cd} = max \begin{cases} \sum_{i\geq 1} \gamma_{G,i} G_{k,i} + \gamma_Q Q_{k,1} + \sum_{j>1} \gamma_{Q,j} \psi_{0,j} Q_{k,j} \\ \sum_{i\geq 1} \gamma_{G,i} G_{k,i} + \gamma_{F,drag} D_{rep,ULS} \end{cases} \quad \text{(C.6b)}$$

where:

$D_{rep,ULS}$ is the representative drag force over the depth of ground above the neutral plane under ultimate conditions;

γ_G, γ_Q are partial factors applied to structural actions;

ψ_0 is a combination factor given in EN 1990;

$\gamma_{F,drag}$ is a partial factor dependent on the assumptions regarding ground parameters and the particular method of analysis used to determine $D_{rep,ULS}$.

NOTE 1. Specialist ground-structure interaction software is commonly used to carry out the analysis.

c) Simplified approach for calculating downdrag

(1) <PER> For simple cases, approximate approaches may be used.

(2) <PER> If the pile settlement s_p under ULS conditions is greater than the settlement of the surrounding fill or soil s_{gr}, the neutral plane may be assumed to be located at the ground surface (top of the pile). In this case the negative shaft friction may be disregarded for the verification of the particular limit state.

(3) <PER> If the pile settlement s_p under ULS conditions is likely to be much smaller than the settlement of the surrounding fill or soil s_{gr}, (such as end bearing piles founded in rock, or piles founded in very stiff ground), the neutral plane may be assumed to be located at the base of the settling fill or soil layer. Representative values for the drag force D_{rep} may be taken as an upper bound (superior) value derived for the full thickness of the settling fill or soil.

(4) <PER> For SLS conditions, the neutral plane may be assumed to be located at the base of the settling fill or soil layer and representative values for the drag force D_{rep} should be derived for the full thickness of the settling fill or soil.

d) Representative downdrag (negative shaft friction)

(1) <PER> The representative unit shaft friction τ_s at any particular depth within the settling ground may be derived using either of the following assumptions:

- total stress approach for extremely low and very low strength fine soils or fills;
- effective stress approach for very loose and loose coarse soils or fills.

(2) <PER> Under total stress conditions, the negative unit shaft friction $q_{s,dd}$ can be derived using Formula (C.7):

$$\tau_s = \alpha c_{u,rep} \tag{C.7}$$

where:

α is an adhesion factor;

$c_{u,rep}$ is the representative value of the undrained shear strength of the fill or soil.

NOTE 1. The value of α typically ranges between 0.15 and 1.60, but α = 1 is often adopted.

(3) <PER> Under effective stress conditions, negative unit shaft friction $q_{s,dd}$ may be derived using Formula (C.8):

$$\tau_s = K_0 \tan \delta_{rep}\, \sigma'_v \; or \;\; \beta \sigma'_v \tag{C.8}$$

where:

σ'_v is the vertical effective stress;

K_0 is the coefficient of at-rest earth pressure;

δ_{rep} is the representative value of the interface friction angle between pile and ground;

φ'_{rep} is the representative value of the friction angle of the ground;

β is equal to $K_0 \tan(\delta_{rep})$.

NOTE 1. The representative value of the interface friction angle δ_{rep} can be taken equal to φ'_{rep} for cast-in-place concrete piles, or $0.75\varphi'_{rep}$ for concrete precast or preformed steel piles,

NOTE 2. For fine fills or soils β can normally be assumed between 0.20 and 0.30. For coarse fills or soils β is normally greater than 0.30.

C.12 Calculation model for transverse loads due to horizontal ground movements

a) General

(1) <RCM> The transverse action D_{rep} acting on a pile due to transverse ground displacement should be classified as a permanent action.

NOTE 1. Transverse loads are possible for piles installed through transverse moving ground caused by loading of the ground close to or adjacent to the pile, excavation or unloading of the ground, creeping fill or soil, landslides or earthquakes.

(2) <RCM> Because of the complexity of the loading, an interaction analysis should be carried out to determine the ground-pile interaction and to provide displacements, strains and forces in the pile shaft. For the analysis, representative values of structural actions, ground parameters, pile geometry, pile strength and stiffness should be used.

NOTE 1. It is possible to adopt a range of upper and lower bound ground parameters for the interaction analysis to allow for the adverse effect of the spatial ground variability as well as uncertainties in determining representative strength and stiffness of the ground. This is of particular importance for multi-layered ground conditions.

(3) <RCM> The representative displacements, strains and forces calculated for the pile shaft should be used for the structural design by application of a suitable partial factor applied to the effect of the actions.

(4) <PER> Under certain conditions, design values of structural actions, ground parameters, pile geometry, pile strength and stiffness can be adopted with the output used for the structural design without need for further partial factors.

(5) <RCM> In this case. the design transverse action D_d should be determined using a partial load factor γ_{Dd} dependent on the assumptions regarding ground parameters and the particular method of analysis used to determine D_{rep}.

NOTE 1. Specialist ground-structure interaction software is commonly used to carry out the analyses.

b) Simplified models for transverse loads

(1) <PER> In simple cases, an equivalent force D_{rep} may be adopted to represent the transverse force acting on the pile as a result of transverse moving ground.

(2) <PER> The equivalent action resulting from ground movements transverse to the pile axis may then be determined by one of the following approaches:

- the representative passive soil pressure acting on the face and sides of the pile;
- the representative flow pressure p_{fk} as illustrated in Figure C.2;
- the representative resulting earth pressure ΔE_{rep};
- for inclined piles the representative weight of the overlying fill or soil.

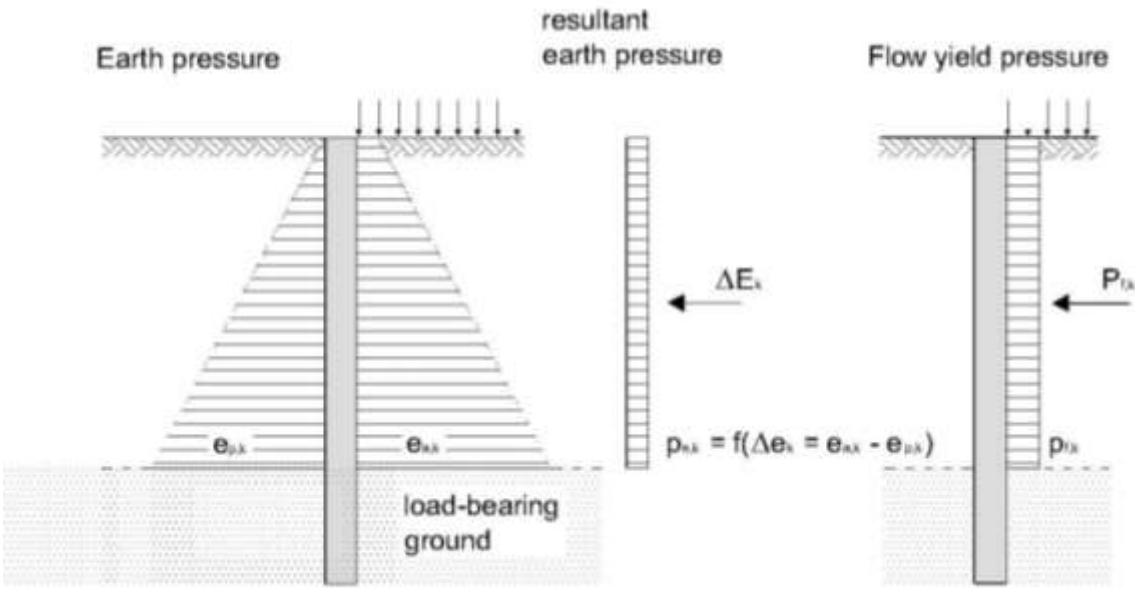

Figure C.2 – Flow yield pressure

C.13 Calculation model for a pile block subject to axial compression loads

(1) <PER> The compressive resistance of a pile group may be verified assuming the individual piles and the ground between them act as a block as shown in Figure C.3.

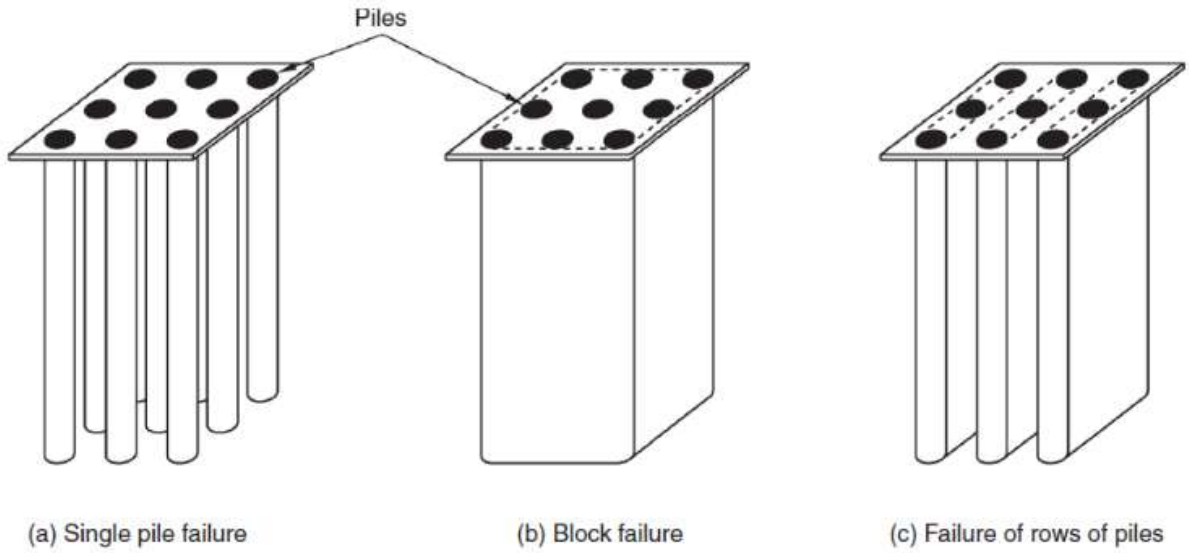

Figure C.3 – Pile group block failure

(2) <PER> For vertical compressive loading of a pile group, the ultimate capacity of the block of soil encompassed by the group may be determined from Formula (C.9):

$$R_{\mathrm{c,group}} = 2D(B + L)q_{\mathrm{s,group}} + q_{\mathrm{b,group}}BL \qquad \text{(C.9)}$$

where:

$R_{\mathrm{c,group}}$ is the pile group's compressive resistance;

D is the pile's embedded depth;

B is the pile group's width;

L is the pile group's length;

$q_{\mathrm{s,group}}$ is the average friction acting on the group perimeter;

$q_{\mathrm{b,group}}$ is the average base resistance beneath the group.

C.14 Calculation model for a pile block subject to axial tension loads

a) Tension pile mechanisms

NOTE 1. Possible mechanisms for groups of tension piles in layered soils are illustrated in Figure C.4.

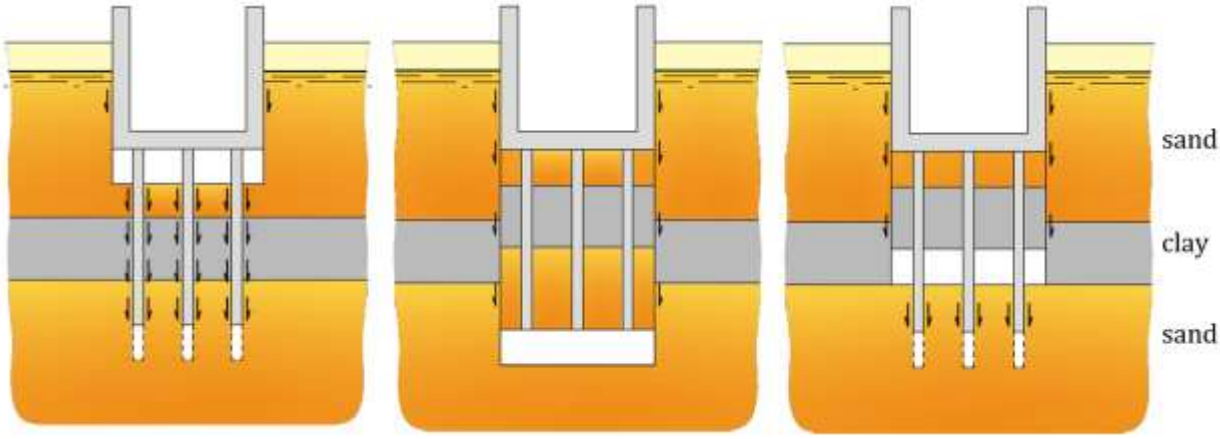

Figure C.4 – Possible mechanisms for groups of tension piles in layered soils:
a) Pull out from ground; b) Lift off of a block of soil; c) Combined pull out and lift off

b) Tension resistance

(1) <RCM> For the evaluation of the block failure, the weight of the soil block related to a single pile should be evaluated as illustrated in Figure C.5 using Formula (C.10):

$$R_{t,group} = n_z \left[I_a I_b \left(L - \frac{1}{3}\sqrt{\left(I_a{}^2 \,.\, I_a{}^2 \right)} \cot\varphi \right) \right] \eta_z \gamma \qquad \text{(C.10)}$$

where:

$R_{t,group}$ is the pile group tension resistance;

L is the pile embedded depth;

I_a is the unit width for a single pile;

I_b is the unit breadth for a single pile;

n_z is the number of piles in the group;

φ is an assumed angle;

η_z is an assumed coefficient;

γ Is the buoyant weight density of the ground surrounding the pile group.

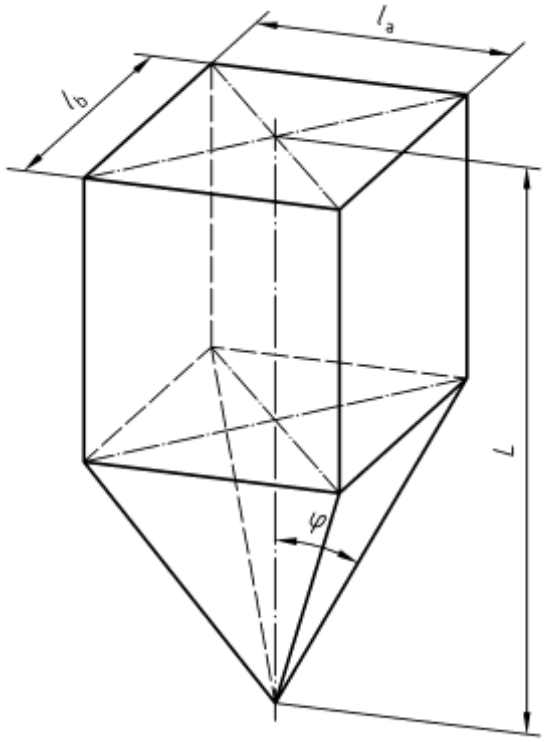

Figure C.5 – Block failure of single pile under tension

C.15 Buckling and second order effects

(1) <RCM> The critical buckling length l_{cr} of a pile fully embedded in compressible ground should be calculated from Formula (C.11):

$$l_{cr} = \pi \sqrt[4]{\frac{E_p \cdot I}{k \cdot D}} \text{ with } k = \frac{E_{gr}}{D} \tag{C.11}$$

where:

E_p is the Young's modulus of the pile material;

I is the second moment of inertia of the pile section;

k is the average representative modulus of subgrade reaction over the buckling length;

D is the diameter or width of the pile in contact with the ground;

E_{gr} is the representative Young's modulus of the low strength compressible ground.

(2) <RCM> The second order effects for precast or cast insitu concrete piles should be calculated if the slenderness ratio λ of the pile is greater than the limiting value λ_{lim} given by Formula (C.12):

$$\lambda_{\text{lim}} = \frac{l_{\text{cr}}}{i} = \frac{l_{\text{cr}}}{\sqrt{l \cdot A}} \tag{C.12}$$

where:

i is the radius of gyration;

A is the cross-sectional area of the pile

NOTE 1. Formula (C.12) is taken from EN 1992-1-1, 5.8.3.1.

(3) <RCM> The second order effects for steel piles should be calculated if the slenderness ratio λ is large, or the axial force N_{Ed} is large compared to the critical elastic force N_{cr}.

(4) <PER> In other cases, buckling effects may be ignored and only cross-sectional checks need to be applied.

NOTE 1. For a fully embedded pile $N_{cr} = 2\sqrt{E_p \cdot I \cdot k \cdot D}$

NOTE 2. A large slenderness ratio is defined as $\lambda \geq 0.2$ or $N_{\text{Ed}}/N_{\text{cr}} \geq 0.04$ according to EN 1993-1-1, 6.3.1.2(4) or $N_{\text{Ed}}/N_{\text{cr}} \geq 0.10$ according to EN 1993-5, 5.3.3(3) for piles fully embedded in the ground.

NOTE 3. Slenderness for composite steel-concrete piles should be in accordance with EN 1994-1-1, 6.7.33.

(5) <RCM> Second order effects for timber piles should be calculated if the relative slenderness ratio λ_{rel} of the pile is greater than 0.3 as specified in EN 1995-1-1, 6.3.2.

(6) <RCM> The subgrade reaction of the ground should be determined taking into account the magnitude of any transverse deflection of the pile and whether this is sufficient to reach the limiting passive pressure of the surrounding ground.

(7) <RCM> Superior or inferior representative values should be adopted for the ground stiffness (Young's modulus, shear modulus or subgrade reaction) depending on which is critical.

NOTE 1. High values are sometimes critical when transversal loads, e.g. from settling soil, are present.

(8) <PER> Second order effects during axial loading may be accounted for by using Formula (C.14):

$$N_{cr,2} = 2\sqrt{E_p \cdot I \cdot k \cdot D}\left(\frac{y}{e_0 + y}\right) \tag{C.14}$$

where:

e_0 is the maximum initial deviation from the pile axis over the buckling length;

y is the transverse deflection caused by the axial force, see Figure C.6.

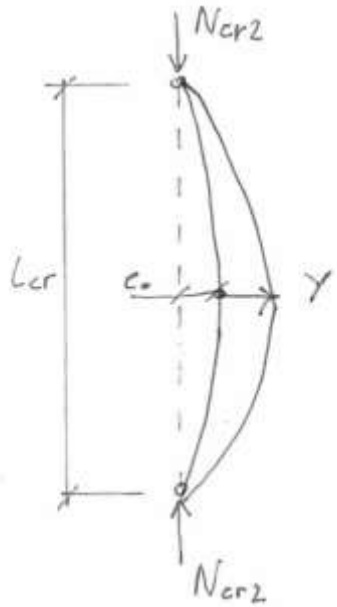

Figure C.6 – Transverse deflection caused by axial force

(9) <RCM> Second order effects should also apply for cross-sectional checks if the slenderness ratio is larger than specified in (2)- (4).

C.16 Calculation model for single pile settlement using load transfer functions

<Drafting Note: Add description and Formulae to illustrate calculation method for single pile settlement based on load transfer functions>

C.17 Calculation model for pile group settlement assuming an equivalent raft

NOTE 1. Possible mechanisms for determining pile group settlement assuming an equivalent raft are given in Figure C.7.

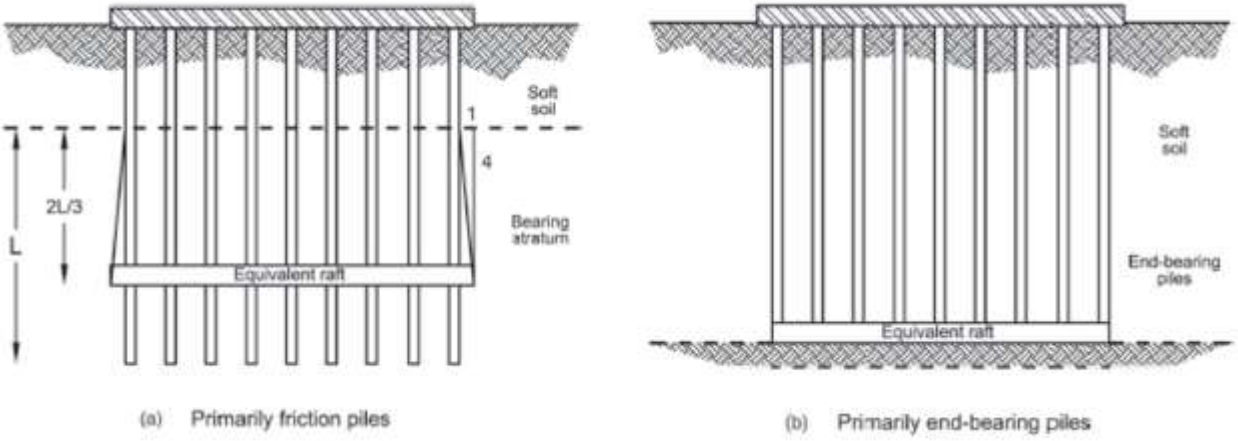

Figure C.7 – Equivalent raft

Annex D

(informative)

Retaining structures

D.1 Use of this Informative Annex

(1) This Informative Annex provides additional guidance to that given in EN 1997-1, 1.3, regarding retaining structures.

NOTE 1. National choice on the application of this Informative Annex is given in the National Annex. If the National Annex contains no information on the application of this informative annex, it can be used.

D.2 Scope and field of application

(1) This Annex covers:

- limit values of earth pressures;
- at rest values of earth pressures;
- compaction effects;
- general principles and application of calculation models: limit equilibrium, beam on springs, numerical continuum models;
- vertical equilibrium of embedded walls;
- basal heave; and
- interaction between anchors and retaining structures.

D.3 Calculation model to determine limit values of earth pressures on vertical walls

(1) <RCM> When using formulae (7.3) and (7.6) in 7.5.1, active earth pressure coefficients $K_{a;}$, K_{aq}, and K_{ac}, and passive earth pressure coefficients $K_{p;}$, K_{pq}, and K_{pc} should be determined as follows.

(2) <PER> Values of the effective earth pressure coefficient $K_{a;}$ may be taken from Figure D.2 to Figure D.5 and for $K_{p;}$ from Figure D.6 to Figure D.9

NOTE 1. The values given in these figures are reproduced from Kérisel and Absi (1990).

(3) <PER> The values of the effective earth pressure coefficients K_{aq} and K_{pq} may be calculated from Formula (D.1):

$$K_{aq} = k_{aq} \cos\delta; K_{pq} = k_{pq} \cos\delta \quad \text{(D.1)}$$

where:

k_{aq} is the inclined active earth pressure coefficient;

K_{aq} is the component of k_{aq} normal to the wall face;

k_{pq} is the inclined passive earth pressure coefficient; and

K_{pq} is the component of k_{pq} normal to the wall face.

(4) <PER> The values of k_{aq} and k_{pq} may be calculated from Formula (D.2):

$$k_{\mathrm{aq}} = \left(\frac{\cos\delta - \sin\varphi\cos\omega_\delta}{\cos\alpha + \sin\varphi\cos\omega_\alpha}\right) e^{-2\varepsilon_a \tan\phi}$$

$$k_{\mathrm{pq}} = \left(\frac{\cos\delta + \sin\varphi\cos\omega_\delta}{\cos\alpha - \sin\varphi\cos\omega_\alpha}\right) e^{2\varepsilon_p \tan\phi} \qquad \text{(D.2)}$$

$$\sin\omega_\delta = \frac{\sin\delta}{\sin\varphi};\ \sin\omega_\alpha = \frac{\sin\alpha}{\sin\varphi}$$

$$\varepsilon_a = \frac{(\omega_a + a)}{2} + \frac{((\omega_\delta - \delta))}{2} + \beta - \lambda;\ \varepsilon_p = \frac{((-\omega_a + a))}{2} - \frac{(\omega_\delta + \delta)}{2} + \beta - \lambda$$

where:

φ is the angle of internal friction of the soil;

δ is the angle of inclination of the earth pressure;

α is the angle of inclination of the surcharge;

β is the inclination of the ground surface;

λ is the inclination of the wall.

NOTE 1. Positive orientations of these angles are indicated in Figure D.1.

NOTE 2. When $\delta = \alpha = \beta = \lambda = 0$, $K_{a\gamma} = K_{aq} = \tan^2(\pi/4 - \varphi/2)$ and $K_{p\gamma} = K_{pq} = \tan^2(\pi/4 - \varphi/2)$.

NOTE 3. When $\alpha = \beta = \lambda = 0$, K_{aq} is approximately equal to $K_{a\gamma}$ and K_{pq} to $K_{p\gamma}$.

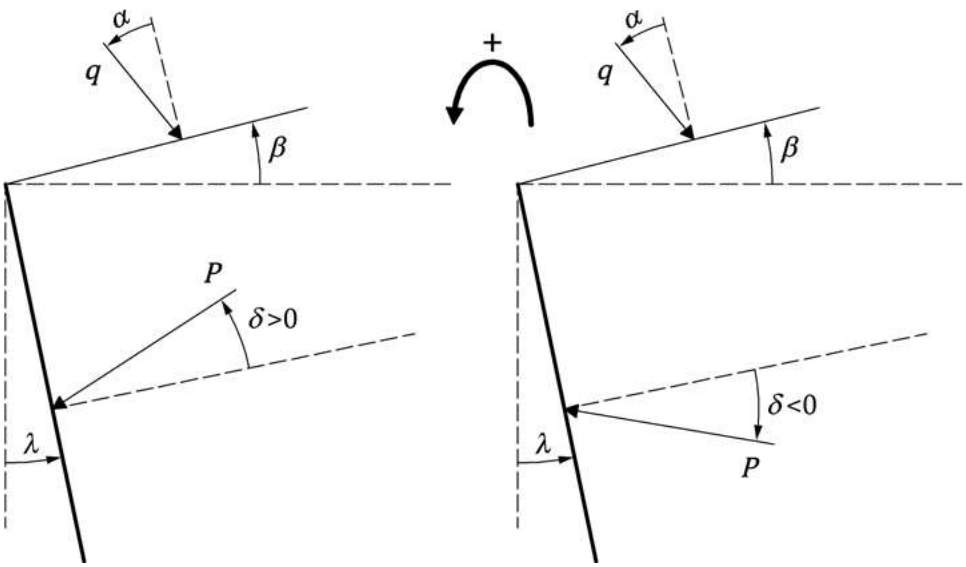

Figure D.1 – Orientation for angles α, β, δ, and λ (left: active earth pressure; right: passive)

(5) <PER> When $\varphi > 0$, the values of K_{ac} and K_{pc} may be calculated from Formula (D.3):

$$K_{\mathrm{ac}} = \frac{1 - \left(\frac{\cos\delta - \sin\varphi\cos\omega_{\delta}}{1+\sin\varphi}\right) e^{-2\varepsilon_{\mathrm{a}}\tan\phi}\cos\delta}{\tan\varphi}$$

$$K_{\mathrm{pc}} = \frac{\left(\frac{\cos\delta + \sin\varphi\cos\omega_{\delta}}{1-\sin\varphi}\right) e^{-2\varepsilon_{\mathrm{p}}\tan\phi}\cos\delta - 1}{\tan\varphi} \qquad \text{(D.3)}$$

$$\sin\omega_{\delta} = \frac{\sin\delta}{\sin\varphi};\ \sin\omega_{\alpha} = \frac{\sin\alpha}{\sin\varphi}$$

$$\varepsilon_a = \frac{(\omega_{\delta}-\delta)}{2} + \beta - \lambda;\ \varepsilon_p = \frac{(\omega_{\delta}+\delta)}{2} - \beta + \lambda$$

where the symbols are as defined for (D.2).

NOTE 1. These expressions are based on the assumption that a/c = tan δ/tan φ, where a is the adhesion between the ground and wall.

(6) <PER> When $\varphi = 0$ and $\lambda = \beta = 0$, the values of K_{ac} (= $k_{\mathrm{ac,u}}$) and K_{pc} (= $k_{\mathrm{pc,u}}$) may be calculated from Formula (D.4):

$$K_{\mathrm{ac,u}} = K_{\mathrm{pc,u}} = 1 + \sin^{-1}\left(\frac{a}{c}\right) + cos\left(\sin^{-1}\left(\frac{a}{c}\right)\right) \qquad \text{(D.4)}$$

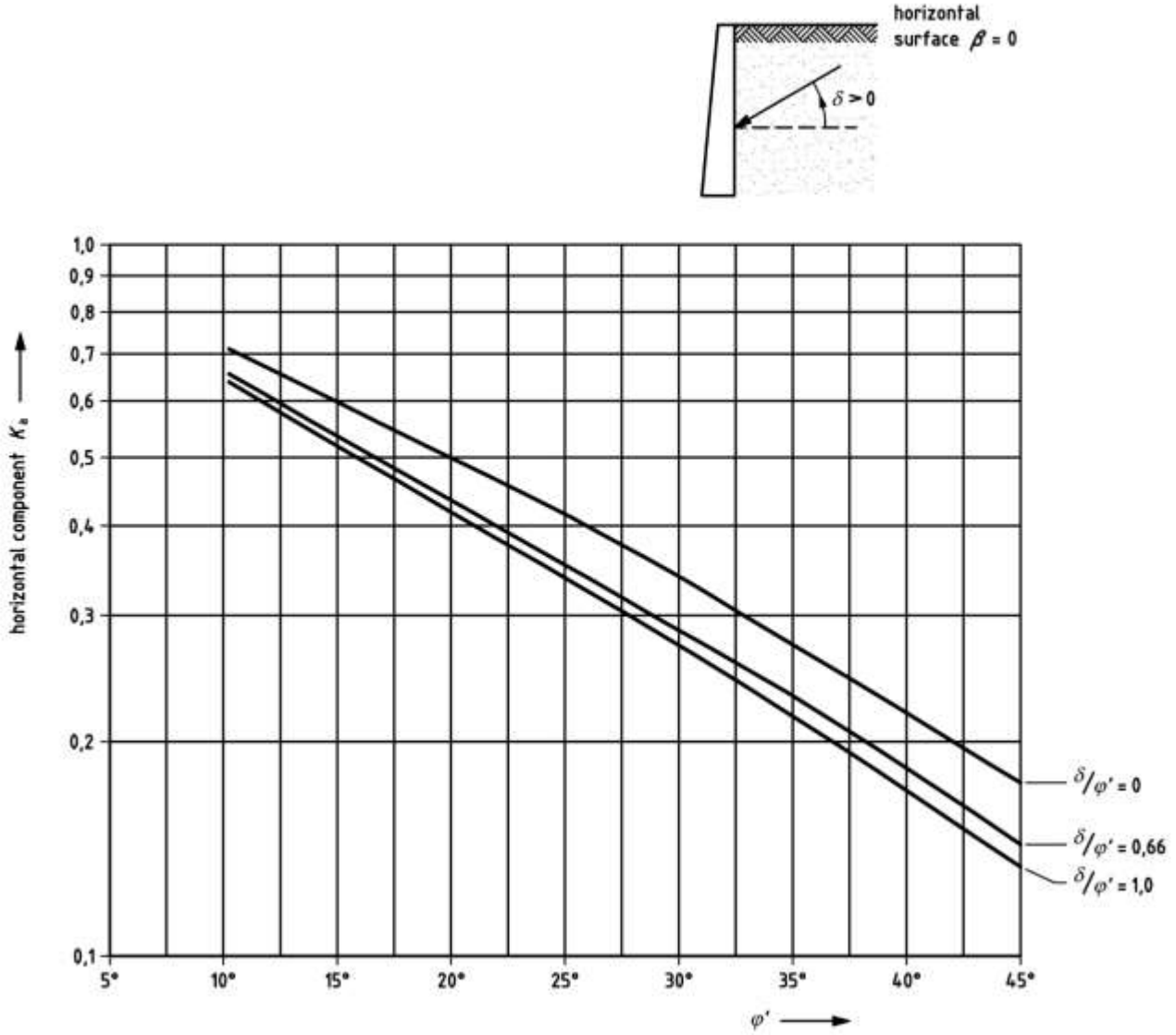

Figure D.2 – Coefficients of effective active earth pressure K_a (horizontal component): with horizontal retained surface ($\beta = 0$)

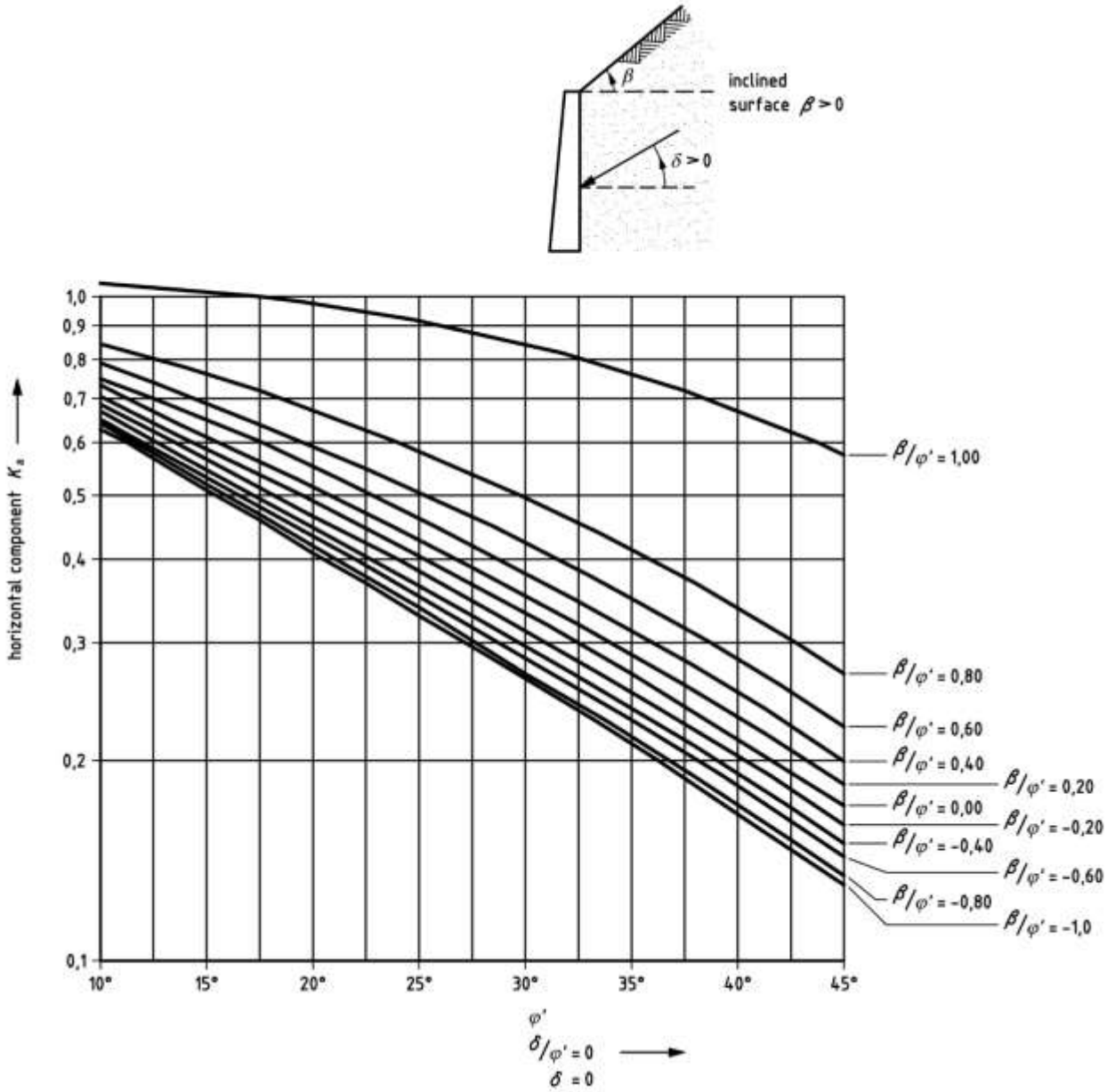

Figure D.3 – Coefficients of effective active earth pressure K_a (horizontal component): with inclined retained surface (δ/φ' = 0 and δ = 0)

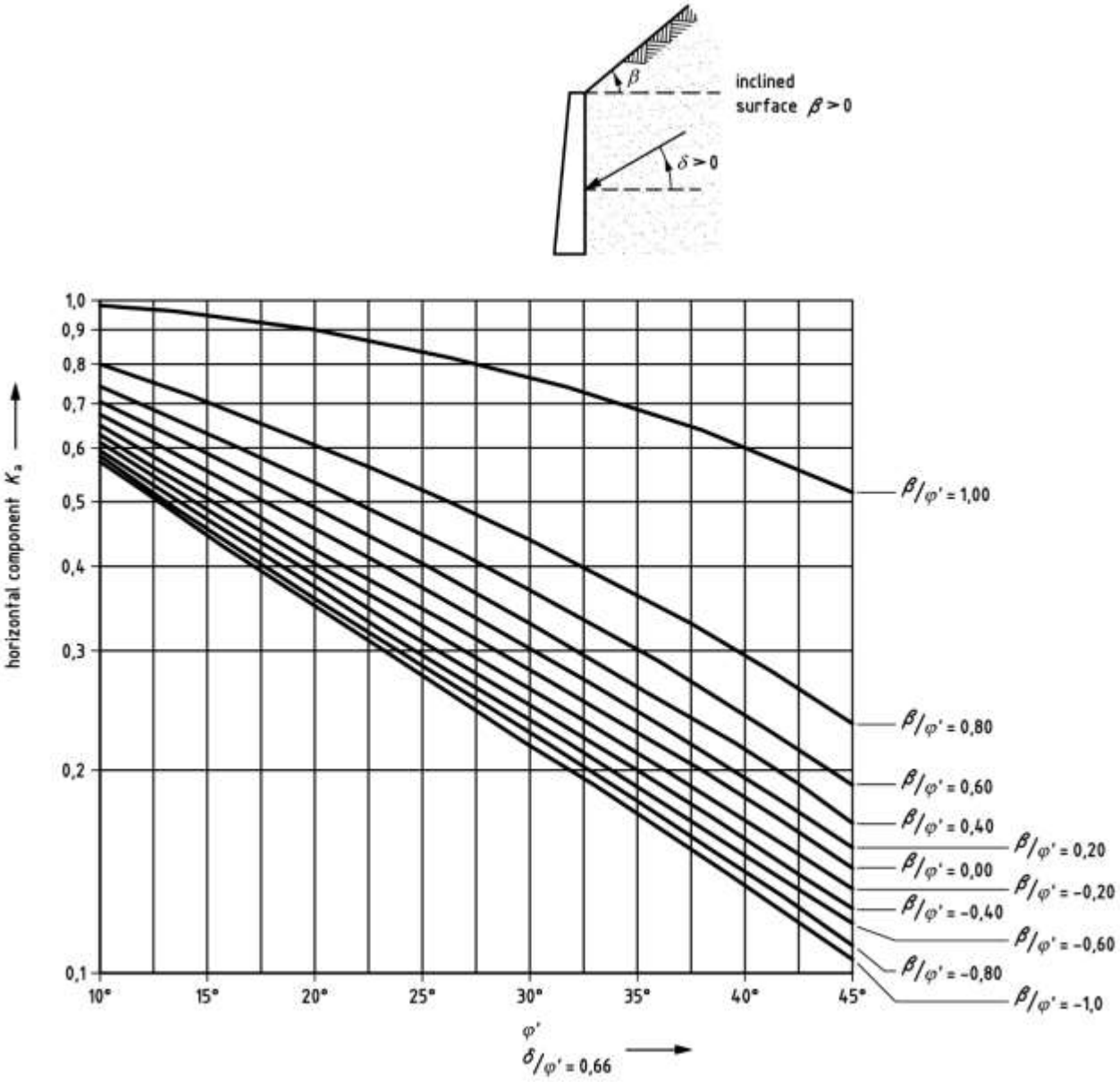

Figure D.4 – Coefficients of effective active earth pressure K_a (horizontal component): with inclined retained surface (δ/φ' = 0,66)

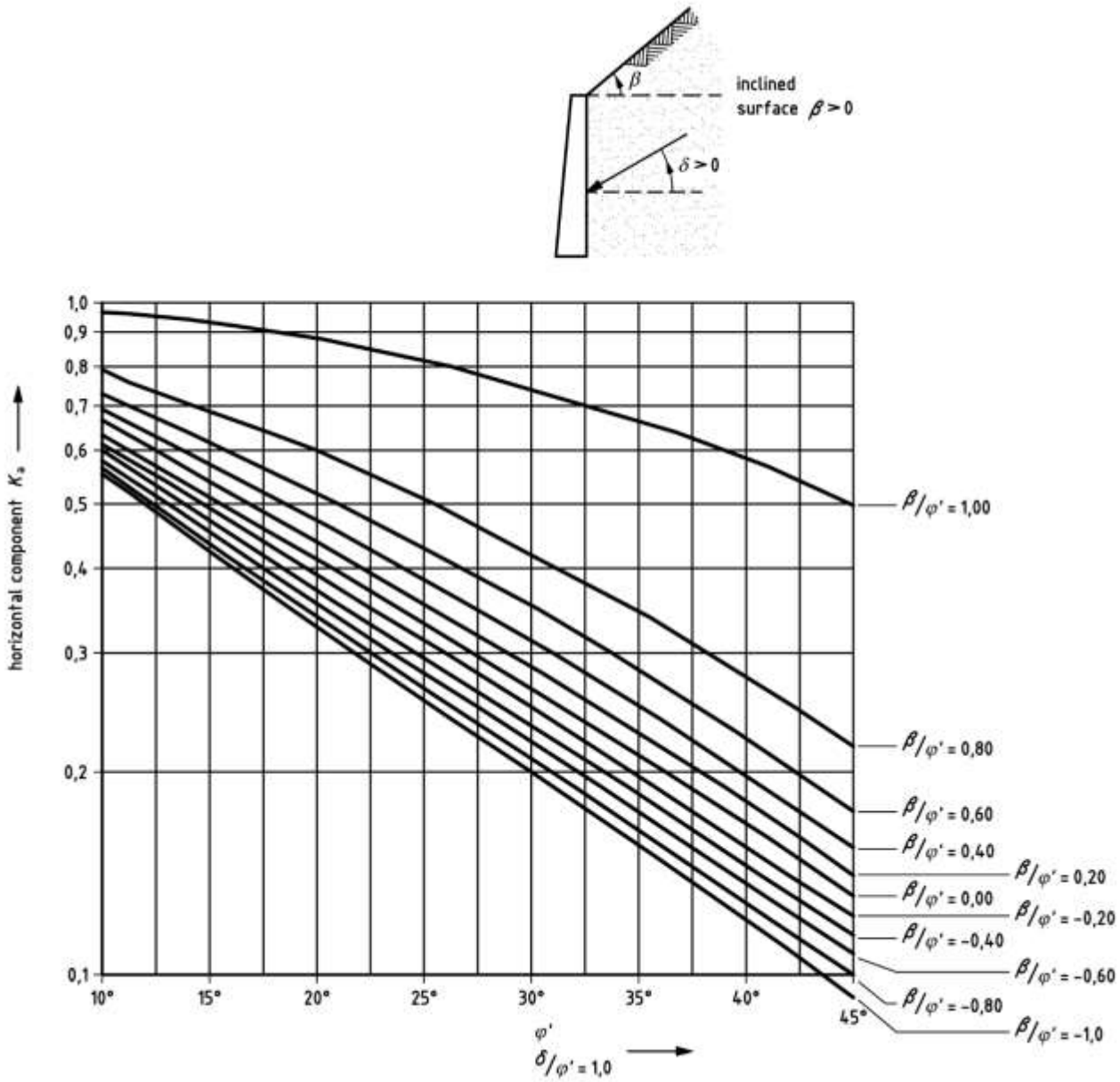

Figure D.5 – Coefficients of effective active earth pressure K_a (horizontal component): with inclined retained surface ($\delta/\varphi' = 1$)

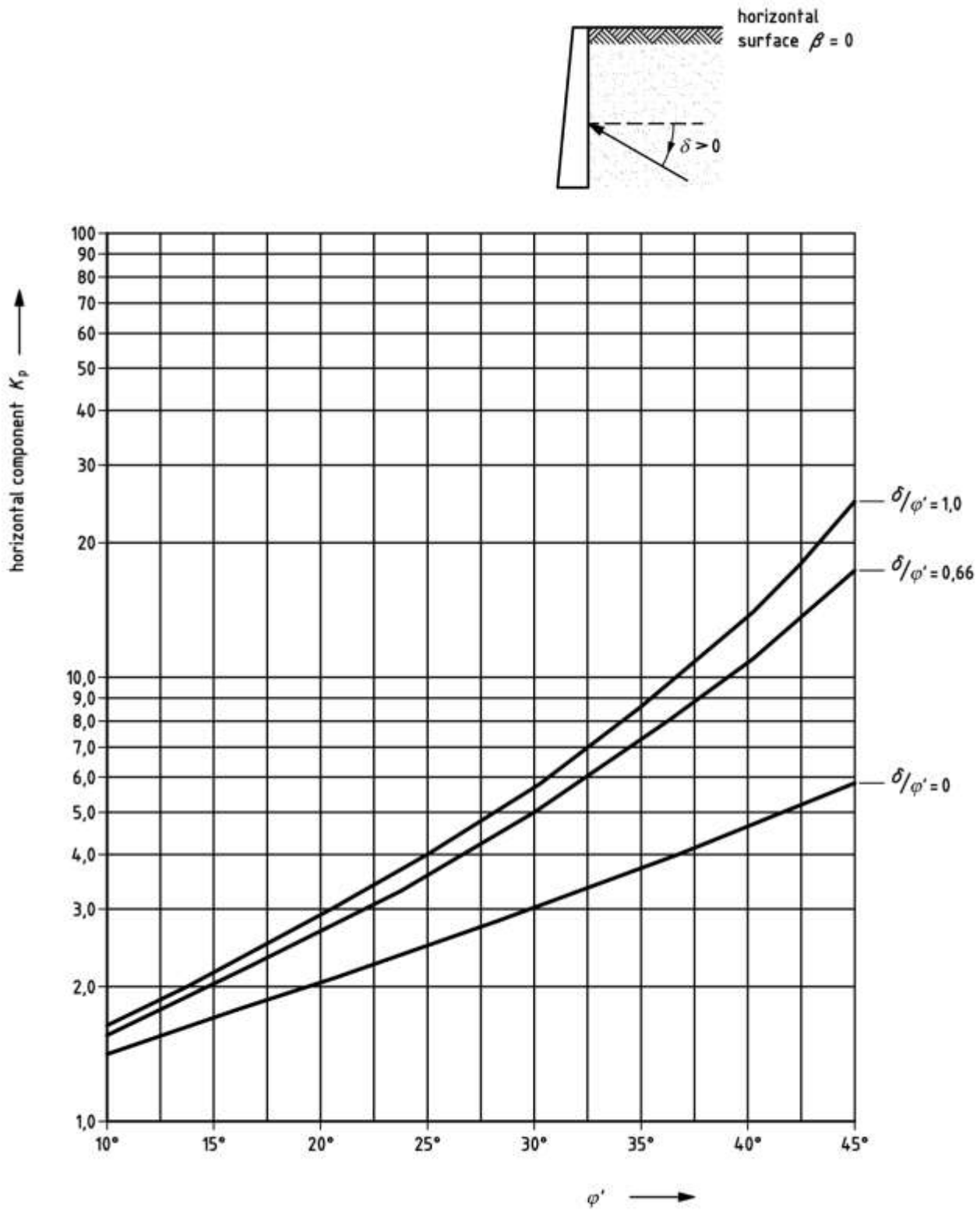

Figure D.6 – Coefficients of effective passive earth pressure K_p (horizontal component): with horizontal retained surface ($\beta = 0$)

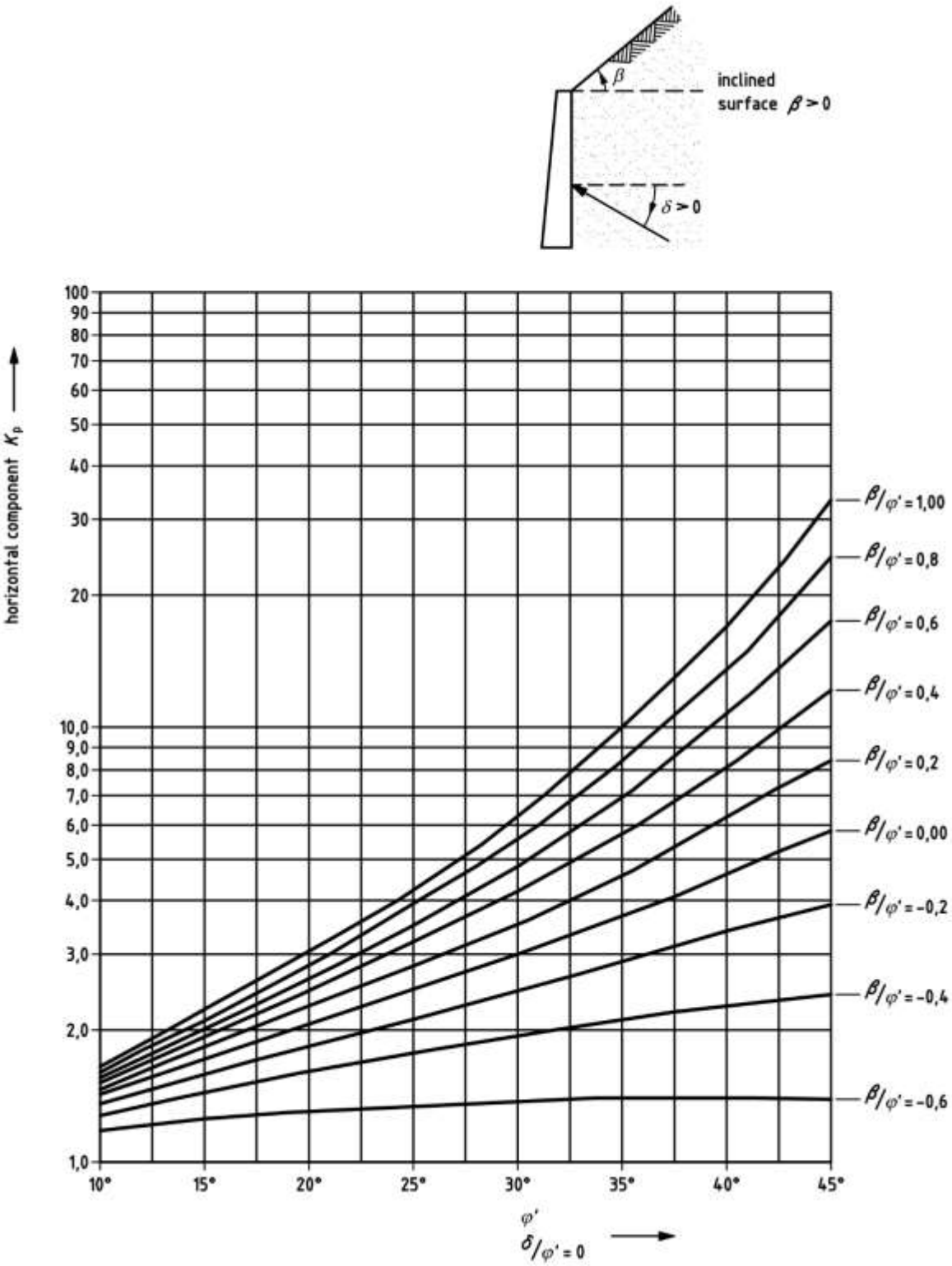

Figure D.7 – Coefficients of effective passive earth pressure K_p (horizontal component): with inclined retained surface ($\delta/\varphi' = 0$)

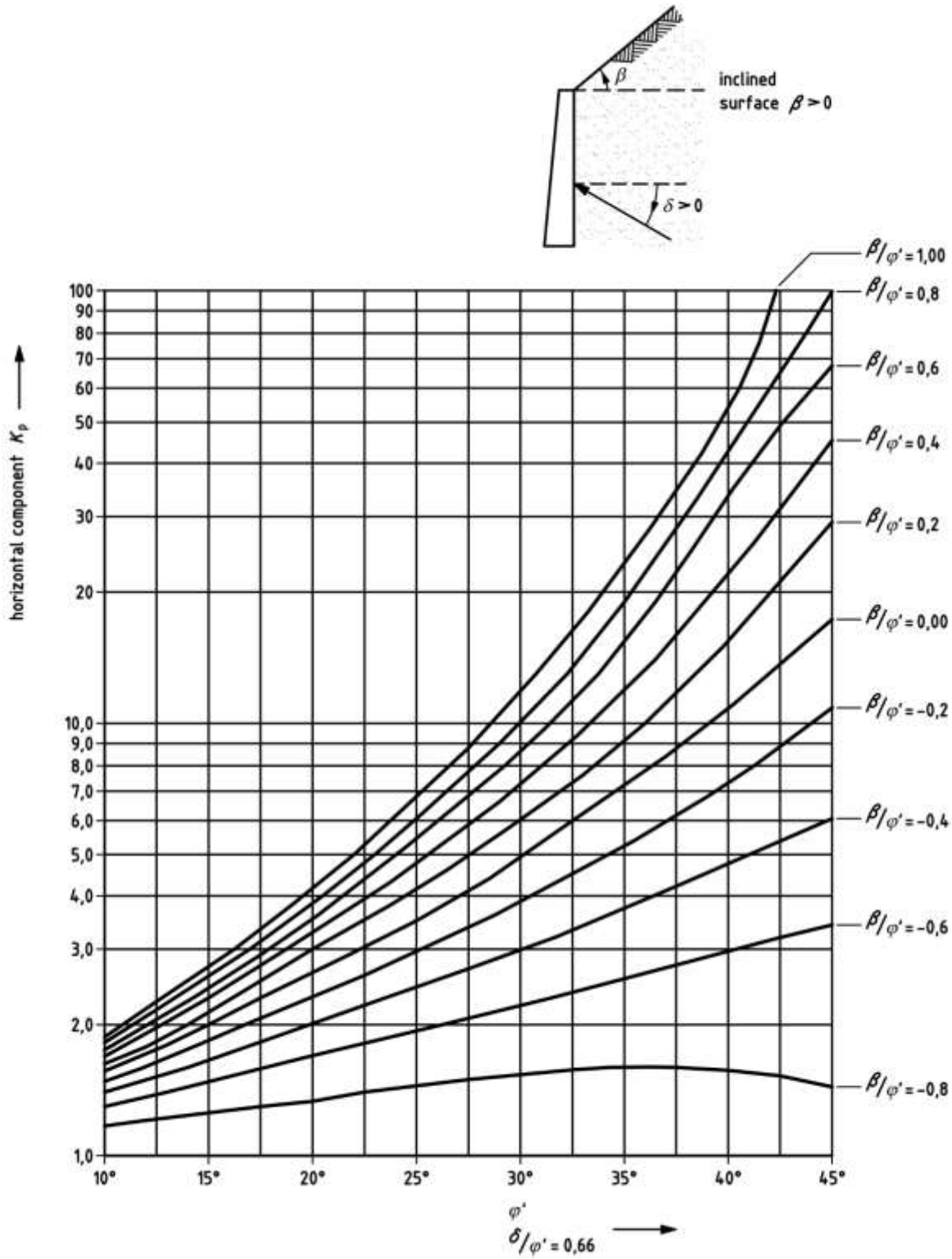

Figure D.8 – Coefficients of effective passive earth pressure K_p (horizontal component): with inclined retained surface (δ/φ' = 0,66)

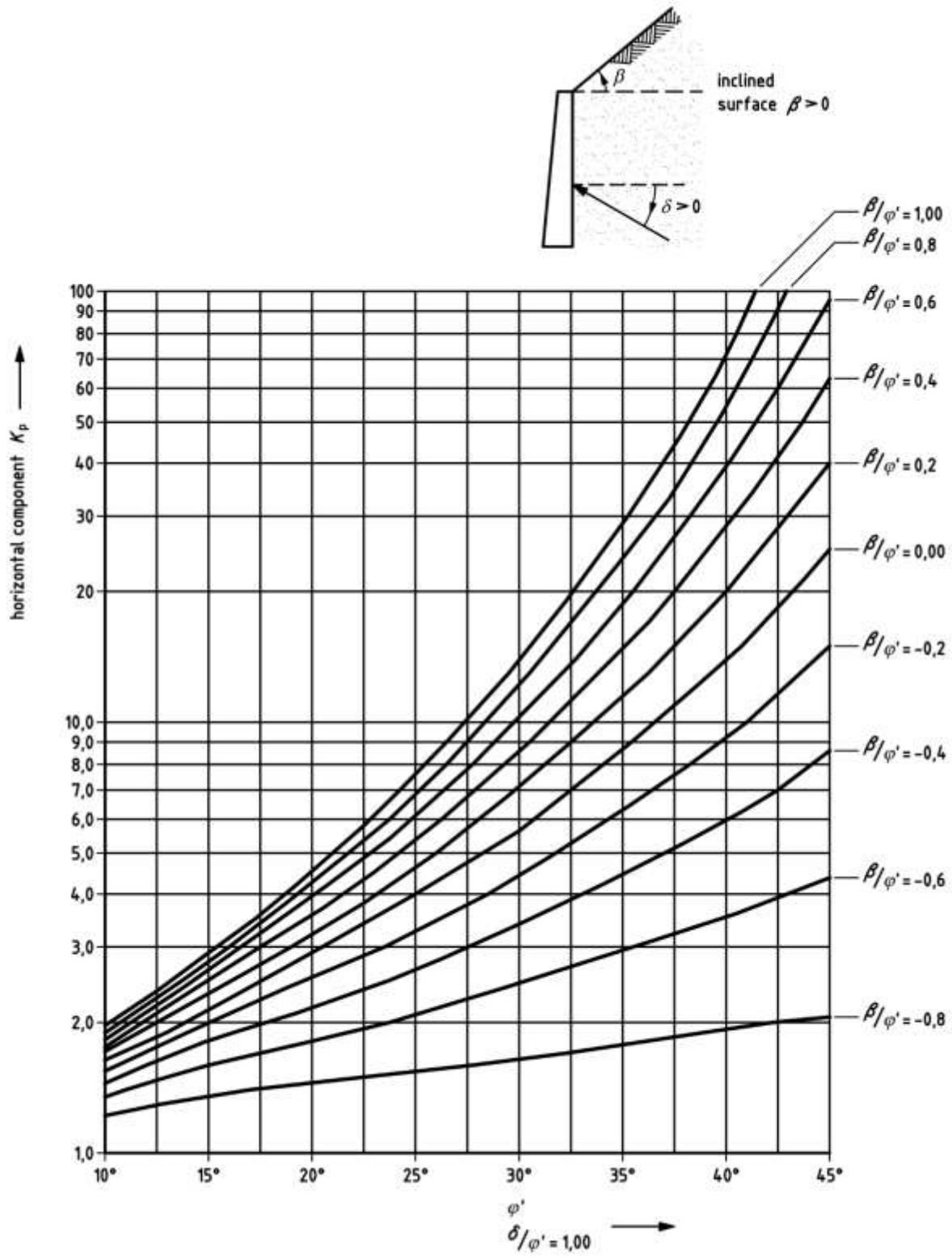

Figure D.9 – Coefficients of effective passive earth pressure K_p (horizontal component): with inclined retained surface ($\delta/\varphi' = 1$)

D.4 Calculation model to determine at-rest values of earth pressure

(1) <PER> When using Formula (7.8) in 7.5.3, the at-rest earth pressure coefficient K_0 may be determined from Formula (D.5):

$$K_0 = (1 - \sin\varphi)\sqrt{R_o} \times (1 + \sin\beta) \leq K_{p\gamma} \quad \text{(D.5)}$$

where:

φ is the soil's internal angle of shearing resistance;

R_o is the over-consolidation ratio at depth z_0 (equal to $\sigma'_{v,max} / \sigma'_v$);

$\sigma'_{v,max}$ is the maximum effective overburden pressure at depth z_0;

σ'_v is the current effective overburden pressure at depth z_0; and

β is the inclination of the ground surface above the horizontal;

$K_{p\gamma}$ is the passive earth pressure coefficient.

(2) <RCM> Formula (D.5) should not be used for very high values of R_o or in circumstances involving geological reloading.

NOTE 1. Formula (D.5) can lead to unrealistic values of K_0 close to the ground surface, where the vertical stress is low.

(3) <RCM> The direction of the resulting force should then be assumed to be parallel to the ground surface.

(4) <PER> A distinction may be made between:

- K_0, the earth pressure coefficient in the initial stage before the works begin;
- K_i, the earth pressure coefficient in the initial stage after completion of the retaining wall but before the start of excavation; and
- K_d, the ratio between variations in horizontal and vertical stresses during excavation assuming at-rest conditions, that is without horizontal displacement of the retaining wall

NOTE 1. Assuming linear elastic behaviour, $K_d = \upsilon / (1 - \upsilon)$, where υ is Poisson's ratio of the soil.

NOTE 2. In practice, due to the poor knowledge about reliable values for K_i and K_d, it is typically assumed that $K_0 = K_i = K_d$.

NOTE 3. For overconsolidated cohesive soils, in which excavation may lead to a significant stress relief, $K_i < K_0$.

D.5 Earth pressures due to compaction

NOTE 1. Measurements indicate that additional pressures depend on the applied compaction energy, the soil moisture content, the thickness of the compacted layers and the travel pattern of the compaction machinery. Horizontal pressure normal to the wall in a layer can be reduced when the next layer is placed

and compacted. When backfilling is complete, the additional pressure normally acts only on the upper part of the wall.

(1) <PER> When additional pressures need to be considered, guidance may be found in ... , summarized below.

(2) <PER> In the absence of groundwater pressures, the earth pressure p in Formula (7.2) may be assumed to increase linearly down to a depth z_p given by Formula (D.6):

$$z_{\mathrm{p}} = \frac{p_{\mathrm{cp}}}{\gamma K_{\mathrm{ph,0}}} \tag{D.6}$$

where:

γ is the weight density of the soil;

p_{cp} is the horizontal compaction earth pressure ordinate;

$K_{\mathrm{ph,0}}$ is the passive earth pressure coefficient with wall friction equal to zero.

(3) <PER> For non-yielding walls, compaction pressure may be represented by the bi-linear profile shown in Figure D.10(b).

NOTE 1. Compaction pressures from soil placement in layers more realistically produces a distribution similar to that shown in Figure D.10(a).

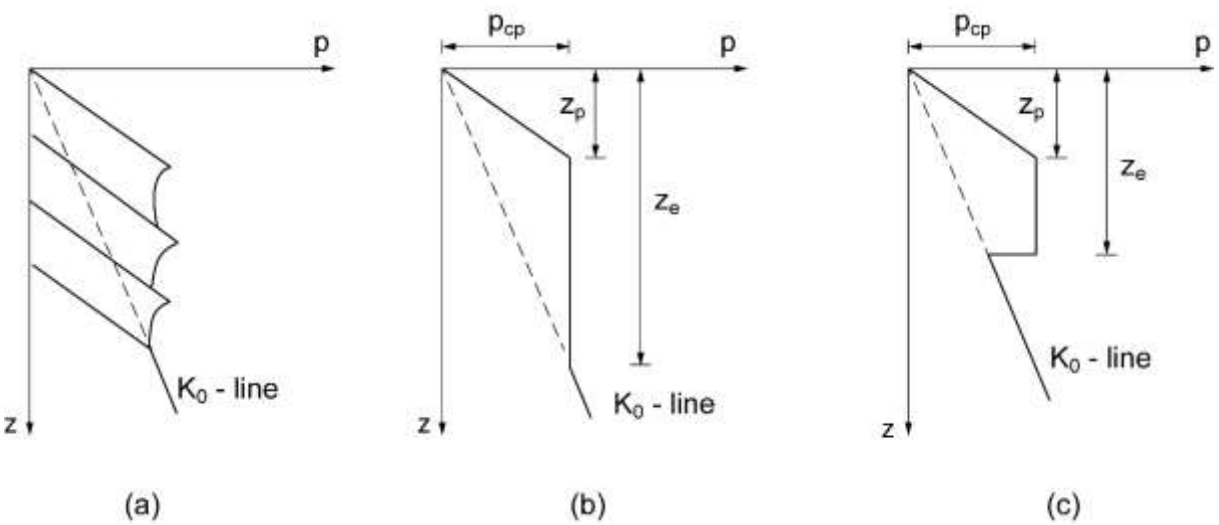

Figure D.10 – Distribution of compaction earth pressure (a); simplified profile for non-yielding wall (b) and yielding wall (c)

(4) <PER> Compaction earth pressures may be assumed to be given by at-rest conditions with coefficient K_0 between the depths z_p and z_e given in Formula (D.7):

$$z_{\mathrm{e}} = \frac{p_{\mathrm{cp}}}{\gamma K_0} \tag{D.7}$$

where:

γ is the weight density of the soil;

p_{cp} is the horizontal compaction earth pressure ordinate;

K_0 is the at-rest earth pressure coefficient.

(5) <PER> For yielding walls, the simplified depth profile shown in Figure D.10 may be adopted. In case the wall displacement is associated with earth pressures between active and at-rest conditions, interpolated values may be used.

NOTE 1. Values for p_{cp} and z_a are given in Table D.1.

Table D.1 – Values of compaction earth pressure p_{cp} (kPa)

Wall	Intensive compaction Width b of backfilled space		Light compaction (vibratory compactor mass ≤ 250 kg)
	$b \leq 1.0$ m	$b \geq 2.5$ m	
Non-yielding	40	25	15
Yielding	25 (z_a = 2.0 m)		15 (z_a = 2.0 m)
Use interpolation for intermediate values of b,			

D.6 Limit equilibrium models

NOTE 1. Limit equilibrium models consist in analysing horizontal stability of embedded retaining walls by assuming that limit values of earth pressures are met on both sides of the wall.

(1) <PER> Limit equilibrium models may apply as described below.

NOTE 1. In the presence of one single level of supports, such as anchors or struts (see Fig. 7.3(b)), unknown variables are the reaction from supports and the embedded length of the wall; horizontal equilibrium and rotational stability around supports level provide 2 equations from which values of unknown variables may be calculated.

NOTE 2. For cantilever walls, unless a raft exists (see Fig. 7.3(c)), the rotation axis is generally set under the excavation level, so that unknown variables are the passive pressure mobilized earthside under the rotation axis, and the depth of the rotation axis itself; values of both variables may be calculated from horizontal equilibrium and rotational stability equations.

NOTE 3. A conventional method consists in assuming that the rotation axis earthside is at the same level as the resulting passive force; the embedded length of the wall is then calculated as 1.2 x f0, where f0 is the distance between the calculated depth of the rotation axis, and the depth at which active and passive earth pressures are equal to each other.

NOTE 4. In the presence of several levels of supports, additional reactions can only be calculated by making additional assumptions relative to displacements, including support conditions at the wall toe.

NOTE 5. A conventional method consists in assuming that displacements at toe level and supports levels are equal to zero; this results in an inaccuracy that significantly increases with the number of supports.

NOTE 6. Examples of earth pressure diagrams that can be used for typical configurations of multiply supported walls, for which active earth pressure might not be reached on the total height, can be found in <reference

EAB, FHWA>. For only partially compliant walls a weighted average of active pressure and earth pressure at rest can be assumed in the analysis.

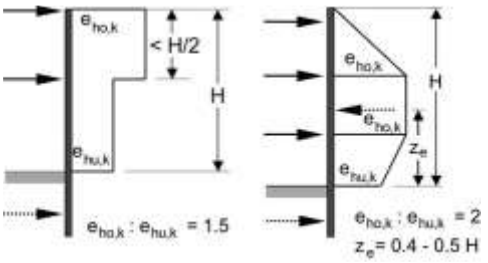

Figure D.11 – Examples of active earth pressure distribution (indicative)

(2) <PER> Limit equilibrium models may be used to estimate the minimum embedded length and support reactions that are necessary to prevent rotational failure (see §7.6.4.1).

NOTE 1. Limit equilibrium models are simplified models that do not provide information relative to displacements; they are generally used for the design of isostatic embedded walls, and preliminary design of complex hyperstatic structures, for which construction sequences, and structural stiffness or prestressing effects, generally need to be explicitly considered

D.7 Beam-on-spring models

NOTE 1. Beam-on-spring models consist in analysing horizontal stability of embedded retaining walls based on an iterative calculation of earth pressures, that takes horizontal wall displacements into account.

NOTE 2. Beam-on-spring models are apt to consider limit values of earth pressures based on active and passive coefficients; at-rest earth pressures using the K0 coefficient (see § 7.5.3 and D.4); and intermediate values of earth pressure (see § 7.5.4 and D.8).

NOTE 3. Wall displacements are calculated by reference to the ground, the overall displacement of which, if any, cannot be considered.

NOTE 4. The consequence is that neither limit equilibrium nor beam-on-springs models can take account of the following, unless additional effects are introduced in the calculation: slope instability; interaction between the retaining structure and rear anchors; interaction between front and rear quay walls.

(1) <PER> Intermediate values of earth pressures may be calculated by use of the subgrade reaction coefficient, $k = \Delta\sigma / \Delta y$, where $\Delta\sigma$ is the variation of earth pressure associated with a variation of horizontal wall displacement Δy.

NOTE 1. This is a simplification that assimilates the ground to independent springs.

NOTE 2. Due to its empirical nature, assessed values of the coefficient of subgrade reaction should always be derived from comparable experience in similar conditions. Guidance is provided in Annex D.8.

(2) <PER> Limit and intermediate values of earth pressures earth side may also be calculated based on proven methods taking into account the redistribution of earth pressure due to compliance of the earth retaining structural system.

NOTE 1. Relative movements within the retained ground can cause such redistribution when rigidities of different support layers significantly differ from each other, although this should generally be avoided, or when high spans exist between adjacent rigid supports.

(3) <RCM> In such specific circumstances, probed empirical (see D.6(1)) or continuum numerical models should be used to take account for possible arching effects, that mobilize passive rather than active pressures behind rigid supports.

NOTE 1. Beam-on-springs models are nevertheless apt to take account for passive pressures behind rigid supports in case they are prestressed.

(4) <PER> Beam-on-springs models may be used to check the following limit states, in accordance with 7.6 and 7.7:

- serviceability limit states involving horizontal displacements, within the limits given in D.7;
- structural limit states (see 7.6.6);
- rotational failure (see 7.6.4.1).

(5) <PER> Empirical relationships based on past experience may be used to derive soil settlements behind the wall from its horizontal displacement.

NOTE 1. Ratios between maximum vertical and maximum horizontal displacements usually lie between 0.5 and 1.

D.8 Calculation model to determine intermediate values of earth pressure

<There is an opene discussion with TG4 about keeping D.8. PT5's opinion is that this Clause may be useful to provide guidance and avoid using arbitrary values of the subgrade reaction coefficient, that often lead to misleading results. But most of all, it cannot be acceptable to include a development on reaction diagrams that are specific to bridge abutments, as required by SC7, without providing any guidance for the general case of embedded structures.>

(1) <PER> Assuming linear elasticity theory, the value of the subgrade reaction coefficient k may be estimated from the approximate Formula D.7:

$$k = \frac{E_s}{d} \tag{D.7}$$

where:

E_s is the soil's modulus of elasticity; and

d is the interaction length.

NOTE 1. Although soil behaviour is generally known to be neither elastic nor linear, it must be emphasized that, as far as embedded retaining structures are concerned, excavation and passive pressure mobilization partly falls within an unloading reloading process, for which such assumption might not be so unrealistic; this might explain why beam on springs models have been shown to match reasonably well monitoring results for current projects so far.

(2) <RCM> When determining the interaction length d, the following should be considered:

- the interaction length cannot be larger than the total embedment length D of the wall;
- in practice, it may generally be considered that $d < 2/3\ D$;
- during intermediate excavation stages, for which passive earth pressure is only mobilized along a limited part of the embedded height, an order of magnitude, consistent with the theory of beams

resting on elastic supports and confirmed by a large series of monitoring results, is d = 1.5 l_0, where $l_0 = (4EI / k)^{1/4}$, and EI is the bending stiffness of the wall per linear metre;

– in specific circumstances where the embedded length is determined by hydraulic considerations rather than by the mechanical mobilization of passive earth pressure due to excavation (typically pumping phases without excavation, tidal effects on quay walls, high water head and increased embedded length in order to reach an impervious layer), the interaction length may no longer depend on the bending stiffness, as high differential water pressures affect the total height.

NOTE 1. In current situations for which the interaction height is dependent on the bending stiffness, an estimate derived from relationships above is $k = 0.4\ E_s^{4/3}/(EI)^{1/3}$.

NOTE 2. As expressed in A.38(1) NOTE 5, the soil modulus Es to consider should be intermediate between a first loading Young modulus E_i and an unloading reloading modulus E_{ur} (see D.9 and Figure D.12).

(3) <PER> Previous clauses only apply for embedded retaining structures. Alternative methods may be used for specific structures such as integral bridge abutments, that are not properly-so-called retaining structures but mobilize passive pressure in the backfill.

(4) <RCM> Backfill soil reaction forces on bridge abutments should consider the increase in passive earth pressure with wall movement.

(5) <PER> For temperature induced seasonal wall movements, the predominant pattern is a combination of horizontal translation and rotation about the wall base. The horizontal component of the mobilised passive earth pressure coefficient $K_{ph,mob}$ along the wall height may be determined from Formula (D.8):

$$K_{\mathrm{ph,mob}}(z) = K_0 + \left(K_{\mathrm{ph}} - K_0\right)\frac{v(z)/z}{a+v(z)/z} \qquad \text{(D.8)}$$

where:

K_0 is the coefficient of earth pressure at rest;

K_{ph} is the horizontal component of the coefficient of passive earth pressure;

z is the depth;

$v(z)$ horizontal displacement at depth z (positive towards the backfill); for a rigid wall rotating about its base, $v(z) = s_h(1 - z/h)$

s_h horizontal displacement at the wall top;

h Is the height of the retaining wall;

a is a backfill-dependent coefficient.

NOTE 3. In the absence of detailed specifications, the value a = 0.02 can be used.

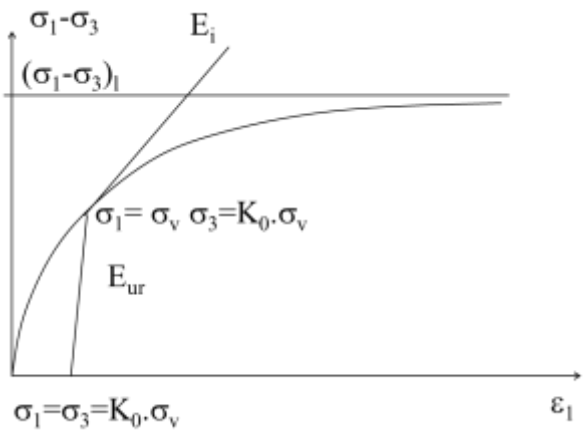

Figure D.12 – Representative soil moduli for retaining structures

D.9 Numerical continuum models

NOTE 1. Numerical continuum models take account of the global soil behaviour and strains, and thus do not present the same limitations as limit equilibrium and beam on springs approaches with respect to displacements calculations (see A.D.7 and D.37): they can take account of interaction with anchors, or more generally with any other underground structure, and provide information relative to settlements.

(1) <RCM> Information relative to settlements should be considered carefully when simplified linear elastic models are used, since such models cannot take account of different soil behaviours during a primary loading and an excavation.

NOTE 1. In the case of retaining structures, only non-linear models provide relevant information with respect to both horizontal and vertical displacements within the ground mass.

NOTE 2. Current soil models rarely take account of the anisotropic behaviour of alluvial soils, which is likely to influence relationship between horizontal and vertical displacements around a retaining structure.

(2) <RCM> Numerical models should always be calibrated against relevant case history data.

(3) <PER> In normally consolidated soils, realistic estimates of horizontal displacements may be obtained using linear elastic models with soil moduli E_s intermediate between a first loading Young modulus E_i and an unloading reloading modulus E_{ur} (see Figure D.12).

(4) <RCM> In undrained conditions, attention should be paid to groundwater pressure decrease associated with stress relief on the active side, the values of which are highly dependent on the accuracy of the model itself: as such pressure decrease is not on the safe side, undrained calculations should generally be avoided.

(5) <PER> Numerical continuum models may be used to automatically detect the most critical geotechnical failure mechanism or combination of failure mechanisms (overall or bottom instability, rotational failure, foundation failure, ...).

D.10 Vertical wall stability

(1) <RCM> According to 7.6.4.2, the skin friction needed to ensure vertical equilibrium of an embedded wall, and the vertical components of active and passive earth pressures needed to ensure its horizontal equilibrium should be consistent with each other.

(2) <RCM> Attention should be paid to the fact that not only vertical forces acting on the retaining wall, but also significant horizontal forces may affect the inclination δ.

NOTE 1. An example of significant horizontal force is the anchor force applied by a quay wall on the rear sheet pile wall that is needed to ensure its horizontal equilibrium: as a matter of fact this horizontal action may tend to reduce the inclination of passive pressures that may be mobilized in front of the sheet pile wall, and correlatively reduce the maximum value of the passive resistance.

(3) <RCM> Consistency between skin friction (in bearing capacity calculations) and vertical components of earth pressure (used to justify horizontal equilibrium) should be checked above the depth at which the shear force applied to the embedded part of the wall is equal to 0 (see Figure Figure D.13).

NOTE 1. This level can be considered as a rotation axis above which it is essential that earth pressures are not underestimated on the retained side and are overestimated on the excavated side; beneath this level, such eventualities become on the safe side.

NOTE 2. Mobilising skin friction to equilibrate vertical forces changes the inclination of earth pressures δ, that tends to increase the active earth pressure earth side if structural forces are exerted downwards, or decrease the passive earth pressure on the excavated side if structural forces are exerted upwards (e.g. inclined struts resting on the excavated surface).

NOTE 3. It should also be considered that even introducing a negative value of the inclination δ, the vertical component of the active pressure earth side may be significantly lower than the friction that could be mobilised without stress relief, and is often neglected in bearing capacity calculations.

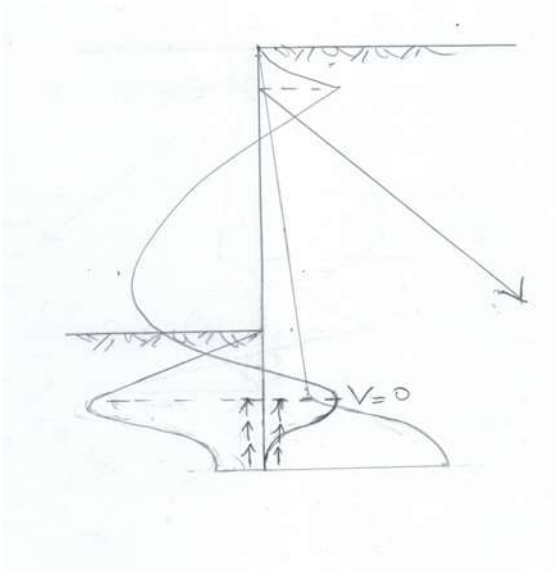

Figure D.13 – Depth at which shear force applied to embedded wall is zero

D.11 Hydraulic heave

<These clauses could be moved to Part 1 at a further stage>

(1) <PER> Resistance to hydraulic heave of coarse soils may be verified using models that check vertical equilibrium of a prism of soil adjacent to the embedded part of the retaining wall.

NOTE 1. The width of the prism to be considered should be set between 0 (infinitesimal width), as recommended by Mandel based on analytical calculations, and D/2, as initially recommended by Terzaghi, where D is the embedded height.

(2) <RCM> Vertical equilibrium should be verified by ensuring that the resulting hydraulic force acting under the basis of the prism is less than the total weight of soil included in it (including any permanent surcharges on top).

NOTE 1. Since effective stresses are equal to zero, shear resistances on vertical surfaces are not considered in the calculation.

NOTE 2. In practice, comparison is made between the seepage force, that is the part of the hydraulic force that exceeds the hydrostatic force (weight of water that corresponds to the prismatic volume), and the effective weight of soil included in the prism.

NOTE 3. The consequence is that, when applying partial factors, only hydrodynamic actions are considered as destabilising.

NOTE 4. If the width of the prism is infinitesimal, and no surcharge is applied on top, it is equivalent to compare:

- the seepage-induced volumetric force i . γ_w, where i is the average value of the vertical ascending gradient along the embedment, and γ_w is the unit weight of water;
- the effective weight of the soil, γ'.

NOTE 5. It must be emphasized that the critical hydraulic gradient that corresponds to failure by hydraulic heave is different, and may be much higher, than the critical hydraulic gradient that corresponds to failure by piping when soils are sensitive to internal erosion (see Part 1 § 8.2.4.3).

D.12 Uplift

<This clause only deals with piled or anchored rafts and is essentially a basis for further discussions. It should probably be transferred to Part 1, or Clauses 5 and 8>

(1) <REQ> For deep excavations with a base slab anchored in the ground by tension resisting piles, it shall be verified that uplift does not occur in either of the two cases shown in Figure D.14:

- pull-out of a single pile assuming uniform distribution of pile loads over the length BC;
- vertical uplift of the entire soil block over the length AC including all the piles.

(2) <RCM> Skin friction over the length AB, along which the total mobilisable friction force cannot be equilibrated by the weight of the soil block, should be neglected.

NOTE 1. Calculation of the length AB may have to consider different soil layers.

(3) <RCM> In the case of anchored rafts, the free length needs to be higher than AB.

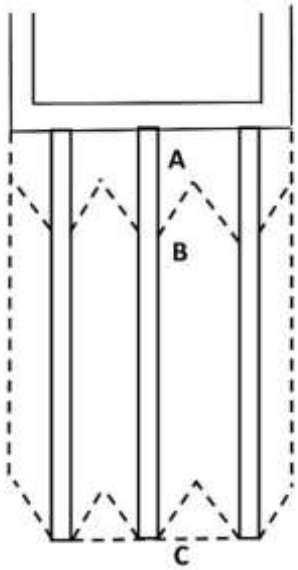

Figure D.14 – Soil wedge of pile-anchored foundation slab

Figure XX. Soil wedge of pile-anchored foundation slab

D.13 **Basal heave**

<This clause is essentially a basis for further discussions.>

(1) <RCM> Mechanical heave due to excavation is generally associated with settlements outside and should be considered as part of overall stability mechanisms.

(2) <PER> Specific models (see Figure D.15) may be used to deal with the following situations:

- conventional models for overall stability calculation do not take account of specific geometry (narrow and deep excavation for instance);
- concentration of vertical hydraulic gradients along the embedded part of the retaining wall may locally initiate an instability process for which rigid block mechanisms may not be considered as realistic enough;
- mechanical extrusion of soft clay that occurs simultaneously with excavation at depth cannot be realistically compensated by external shear resistance, as conventional rigid block mechanisms would assume.

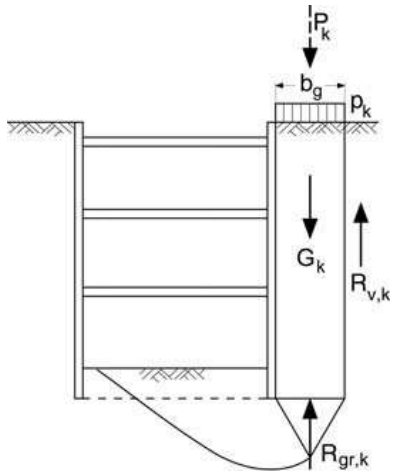

Figure D.15 – Verification against basal heave

(3) <PER> Simplified models may be used for fine or coarse soils in which the external and internal shear resistance above the toe level of the retaining wall is neglected and the same mechanisms as for bearing capacity of shallow foundations are considered.

(4) <PER> In such conditions, the vertical stress at toe level outside the excavation σ_{v1} may be calculated from formula (D.9).

$$\sigma_{v1} = \frac{\gamma B}{2} N_\gamma + \sigma_{v2} N_q + c N_c \qquad \text{(D.9)}$$

where:

N_γ, N_q, and N_c are bearing capacity factors;

γ is the unit weight of soil under the wall;

B is the width to consider outside the excavation.

(5) <PER> Mechanical heave during excavation in fine soils may be analysed assuming undrained conditions and total stress analysis, using $N_i = 0$.

(6) <PER> Mechanical heave in coarse soils may be analysed assuming hydraulic gradients are concentrated within a narrow area very close to the wall, allowing the width B to be neglected.

(7) <PER> Formula (D.9) may in both cases be replaced by Formula (D.10):

$$\sigma_{v1} = \sigma_{v2} N_q + c N_c \qquad \text{(D.10)}$$

(8) <RCM> Verification of resistance to mechanical heave caused by hydraulic gradients in coarse soils should be based on an effective stress analysis, considering effective cohesion c', as well as effective stresses σ'_{v1} and σ'_{v2}.

(9) <RCM> The values of σ'_{v1} and σ'_{v2} in Formula (D.8) should consider weight densities $\gamma'+i_1.\gamma_w$ and $\gamma'-i_2.\gamma_w$, where i_1 is the average gradient along the wall earthside and i_2 the average gradient along the wall on the excavated side.

(10)<REQ> In such situation, these hydraulic gradients and unit weights also need to be evaluated and considered for the calculation of the retaining wall itself.

(11)<RCM> Verification of resistance to mechanical heave during excavation in fine soils should be based on a total stress analysis for which Formula (D.10) may be replaced by Formula (D.11):

$$\sigma_{v1} - \sigma_{v2} = (\pi + 2)c_u \qquad \text{(D.11)}$$

where:

$\sigma_{v1} - \sigma_{v2}$ is the total weight of the excavated soil;

c_u is the undrained shear strength.

NOTE 1. These simplified models are often considered as conservative, more especially in the case of narrow excavations for which assumed failure surfaces cannot totally develop.

NOTE 2. Empirical corrections taking account of geometrical characteristics of the excavation (length/width and depth/width ratios) have been proposed by several authors, such as Terzaghi, Tschebotarioff, Skempton, Bjerrum and Eide.

(12)<RCM> Attention should be paid to the fact that, in normally consolidated clayey layers that are subjects to such mechanisms, the undrained cohesion c_u naturally increases with depth, that should be considered in order to avoid unduly increasing the embedded part of the retaining wall.

D.14 Interaction between anchors and retaining structures

NOTE 1. The purpose of this Clause ((which complements 7.6.4.3) is to ensure that anchors do not interfere with the retaining structure under limit state conditions.

(1) <PER> For grouted anchors, the model illustrated in Figure D.16 may be used to ensure that anchors do not interfere:

- the anchors reaction needs to be balanced by the shear resistance that can be mobilised along the conventional failure surface shown in Figure D.16, in order not to increase earth pressures directly acting on the wall;
- equilibrium of forces acting on the ground between the retaining wall and the anchors thus provide the maximum anchor force that can be equilibrated without increasing earth pressures on the wall;
- it is conventionally considered that interaction can be neglected when the ratio between this maximum anchor force, and the applied anchor force based on previous calculations of the retaining wall, is higher than 1.5.

NOTE 1. If this condition is not met, the shear resistance that the soil mobilizes along the conventional failure surface is insufficient to dissipate the force applied by the anchor. Consequently, the retaining structure has to provide more reaction to ensure overall equilibrium of the soil mass.

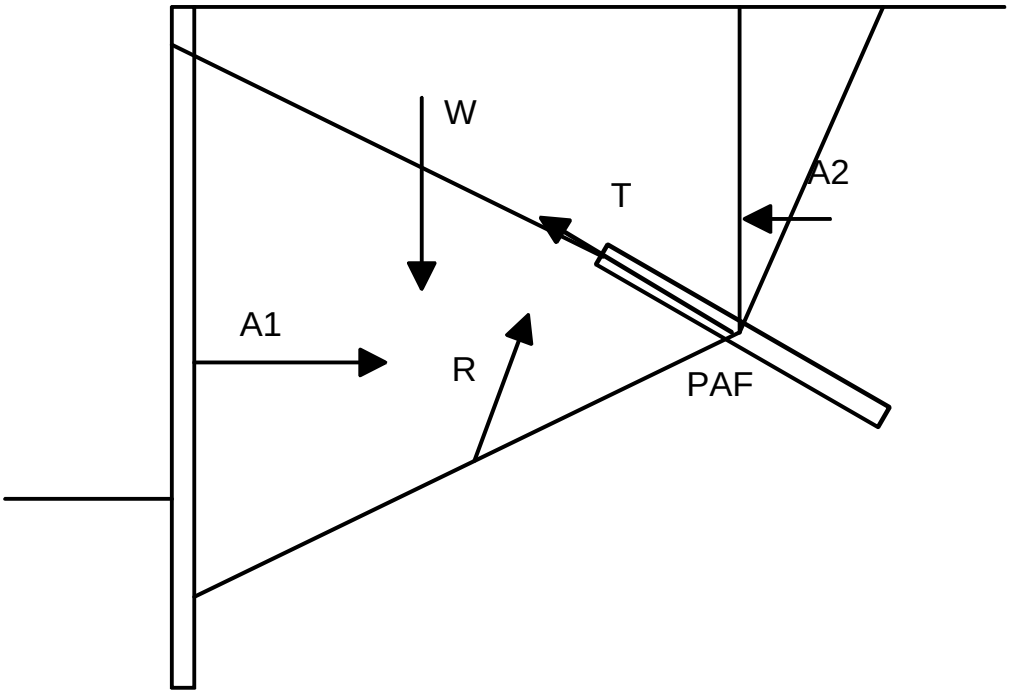

Figure D.16 – Verification of non-interaction between anchors and retaining structure

(2) <PER> For grouted anchors, the resulting force exerted in the ground may be assumed to act in the middle of the fixed anchor length.

(3) <REQ> If micropiles or other anchoring elements without a free length are used, an equivalent free length shall be determined fined in the verification of limit states.

NOTE 2. In this case, (2) and (3) apply.

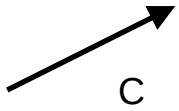

Annex E

(informative)

Anchors

E.1 Use of this Informative Annex

(1) This Informative Annex provides additional guidance to that given in Clause 8 regarding anchors.

NOTE 1. National choice on the application of this Informative Annex is given in the National Annex. If the National Annex contains no information on the application of this informative annex, it can be used.

E.2 Scope and field of application

(1) This Annex covers:

- examples of anchor design models;
- layout of anchors

E.3 Example for anchor design models

(1) <RCM> The free anchor length should be determined during the design of the anchored structure.

NOTE 1. Examples of design models for anchored structures are given in Annexes A and D.

E.4 Layout of anchors

(1) <RCM> The layout of anchors should take into account the proximity of the load-bearing stratum and the execution.

NOTE 1. Examples of the configuration of anchors are given in **Figure E.1**, **Figure E.2**, and Figure E.3.

NOTE 2. In Figure E.3(a), all the grout bodies are outside the active earth pressure wedge. There is no additional earth pressure to the retaining wall. If the grout bodies are very close to the support (see Figure E.3(b)), additional earth pressure act.

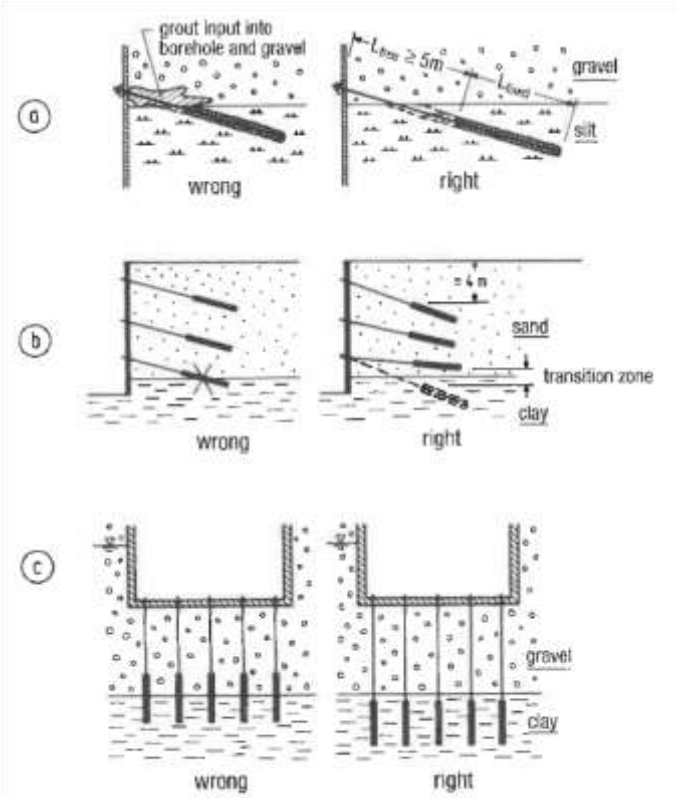

Fig. 23. Lay-out of grout bodies in stratified ground

Figure E.1 – Examples of good and bad anchor configurations in stratified ground

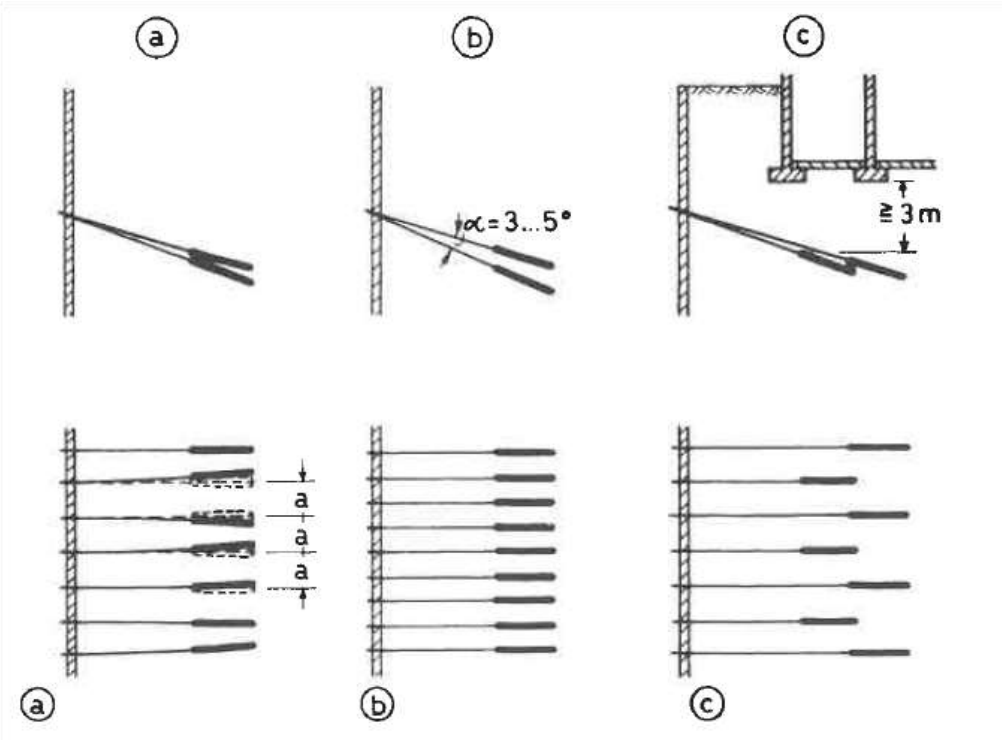

Figure E.2 – Examples of good and bad spreading and staggering of anchors: (upper) section, (lower) plan; (a) wrong; (b)-(c) right

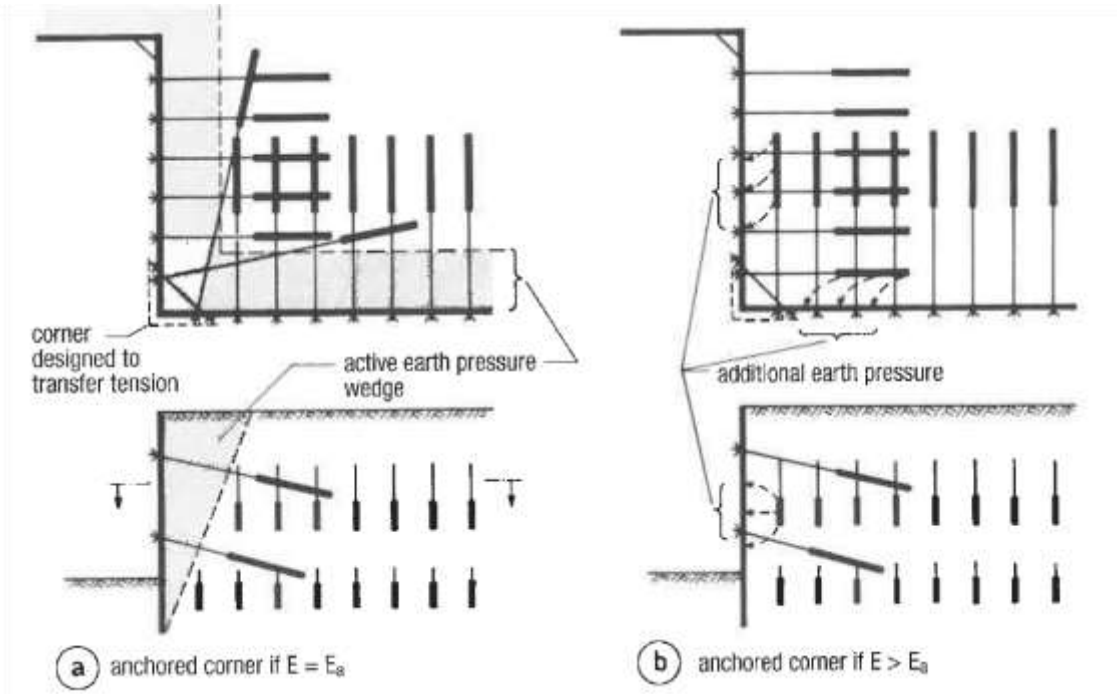

Figure E.3 – Examples of anchoring a protruding wall corner

Annex F

(informative)

Reinforced ground

F.1 Use of this Informative Annex

(1) This Informative Annex provides additional guidance to that given in Clause 9 for reinforced soil structures.

NOTE 1. National choice on the application of this Informative Annex is given in the National Annex. If the National Annex contains no information on the application of this informative annex, it can be used.

F.2 Scope and field of application

(1) This Annex covers:

- calculation models for reinforced ground structures;
- <others to be added>

F.3 Calculation models for reinforced ground structures

a. Method of slices for slip surface analysis <to be moved to clause 4>

(1) <PER> In the case of reinforced slopes, the horizontal interslice forces may be ignored only if (2) is applied as well.

(2) <PER> It may be assumed that reinforcement elements are only considered where they intersect the assumed failure surface on a particular slice only if (1) is applied as well.

(3) <RCM> Allowable force within reinforcing element should be assumed to act along the reinforcing element (see Figure F.1(a)). The force change due to its distribution within the particular slice should be added to the forces acting on that particular slice (see Figure F.1(b)).

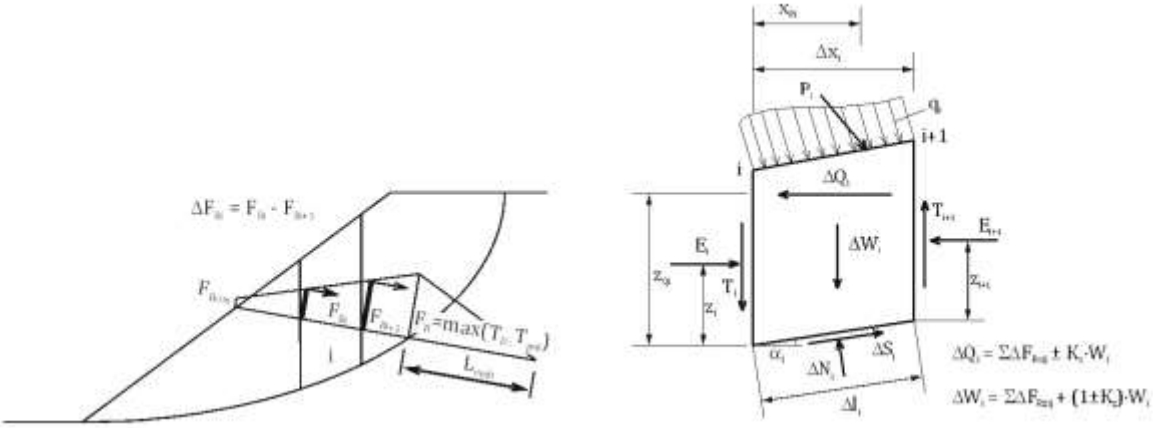

Figure F.1 – Forces from reinforcing element – implementation into method of slices

b. Coherent gravity method

(1) <PER> The coherent gravity method may be used for direct calculation of the load in each layer of soil reinforcements for internal stability check.

(2) <PER> The coherent gravity method may be used for non-extensible reinforcement that develops its tensile design strength at a strain < 1%.

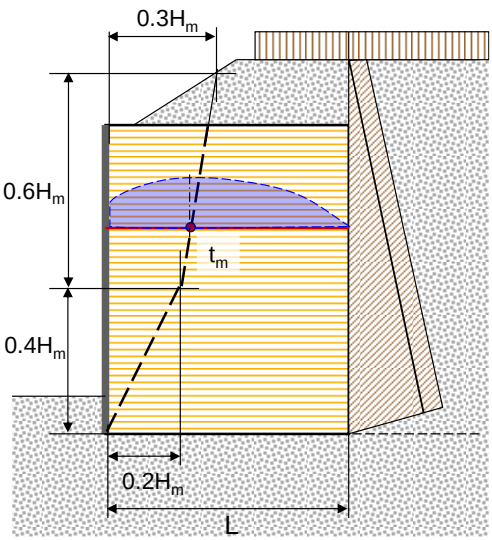

Figure F.2 – Coherent gravity method

(3) <RCM> The stress state within the reinforced soil block should be taken to be K_0 at the effective ground surface reducing to K_a at a depth of 6 m.

(4) <RCM> The maximum tensile force T_j to be resisted by the jth layer of reinforcement (at a depth of h_j from the top of the wall) should be calculated from Formula (F.1):

$$T_j = T_{p,j} + T_{s,j} + T_{f,j} = K\sigma_{v,j}S_{v,j} + T_{s,j} + T_{f,j} = K\left(\frac{R_{v,j}}{L_j - 2e_j}\right)S_{v,j} + T_{s,j} + T_{f,j} \quad \text{(F.1)}$$

where:

$T_{p,j}$ is the tensile force per metre width due to the vertical loads of self-weight and UDL surcharge;

$T_{s,j}$ is the tensile force per metre width due to any strip loading;

$T_{f,j}$ is the tensile force per meter width due to any horizontal loads;

K is the earth pressure coefficient within the reinforced soil block at the depth of the *j*th layer of reinforcement;

$\sigma_{v,j}$ is the vertical stress on the *j*th layer of reinforcements;

$S_{v,j}$ is the vertical spacing of the reinforcements at the *j*th level in the wall; = $|h_{j+1} - h_{j-1}|/2$

$R_{v,j}$ is the resultant vertical load excluding external strip loads on the *j*th layer of reinforcement

L_j is the length of the *j*th layer of reinforcement

e_j is the eccentricity of the resultant vertical load at the level of the *j*th layer of reinforcement

(5) <RCM> The line of maximum tension in the reinforcement should be assumed as indicated on Figure F.2.

(6) <REQ> The available resistance from each layer of reinforcement shall be either the design strength or the anchorage capacity.

NOTE 1. Detailed calculation procedure of coherent gravity method can be found in NF P 94 270.

c. Tie-back wedge method

(1) <PER> The tie-back wedge method may be used for direct calculation of the load in each layer of soil reinforcements for internal stability check.

(2) <PER> The tie-back wedge method may be used for extensible reinforcement that develops its tensile design strength at a strain > 1%.

(3) <RCM> The stress state within the reinforced soil block should be taken to be K_a.

(4) <RCM> The minimum required tensile capacity of each reinforcing element should be determined in accordance with Formula (F.1) with K value set as K_a.

(5) <RCM> The stability of a series of potential straight line failure planes forming wedges through the reinforced soil block should also be checked accounting for beneficial effect from allowable force within each reinforcement layer cut by the failure plane.

(6) <REQ> The allowable force within each layer of reinforcement shall be determined according to 9.6.5.

NOTE 1. Detailed calculation procedure can be found in BS 8006-1.

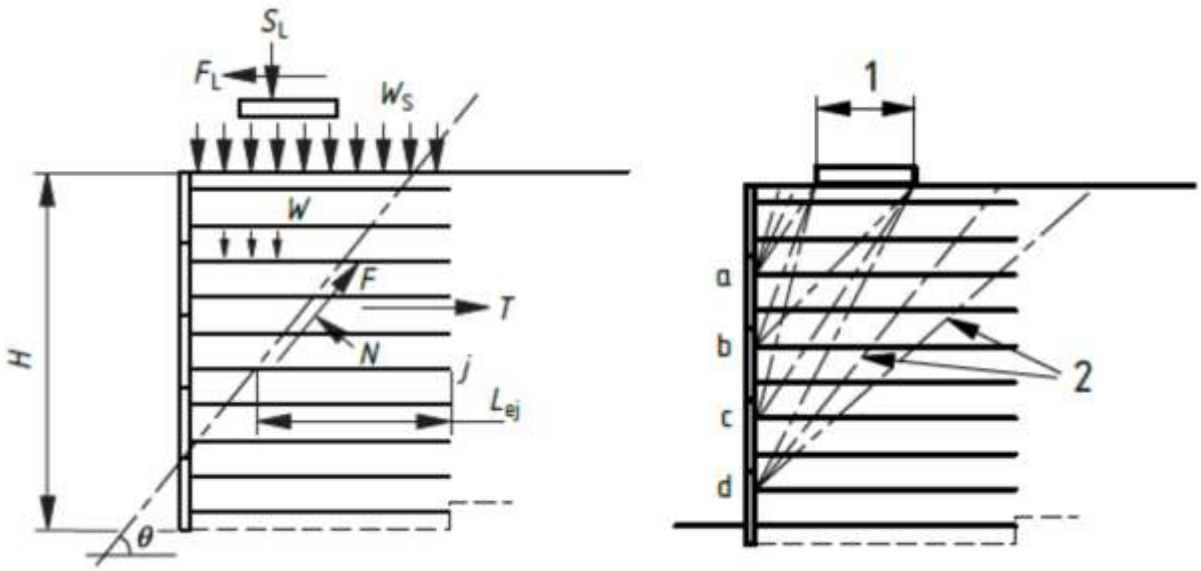

Figure F.3 – Tie-back wedge method

d. Two-part wedge method

(1) <PER> The two-part wedge method may be used for internal and compound stability check.

(2) <RCM> The potential failure mechanism should be assumed to be a two-part wedge with the lower part of the wedge (Prism 1) passing through the reinforced soil structure and the upper part of the wedge (Prism 2) in the retained unreinforced material behind.

(3) <RCM> The stability of any combination of Prisms 1 and 2 should be checked accounting for beneficial effect from allowable force within each reinforcement layer cut by the failure plane of Prism 1.

(4) <REQ> The allowable force within each layer of reinforcement shall be determined according to 9.6.5.

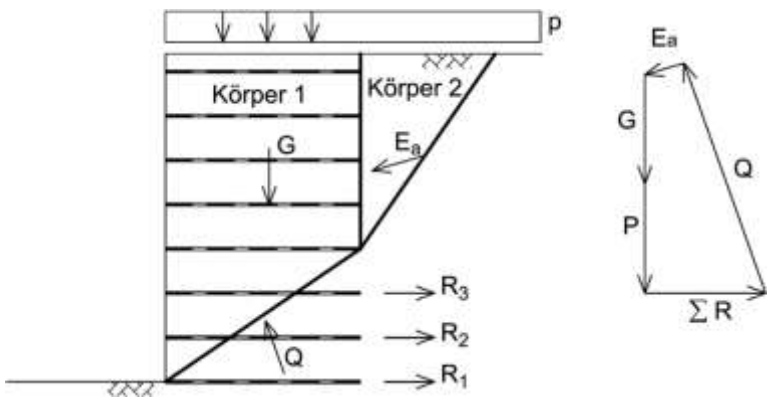

Figure F.4 – Two-part wedge method

F.4 Calculation models for reinforced embankment bases

a. Resistance to transverse sliding

(1) <RCM> The lateral sliding stability of the embankment should be assessed by examining any preferential slip surfaces that pass above the basal reinforcement layers

(2) <RCM>The maximum load in the reinforcement T_{ds} to resist the lateral thrust of the embankment fill should be calculated from Formula (F.2):

$$T_{ds} = 0.5K_a H(\gamma H + 2W_s) \quad \text{(F.2)}$$

where:

K_a is the active pressure coefficient ;
H is the height of the embankment;
W_s is the surcharge load.

(3) <RCM> The minimum length of the embankment side slope L_e should be designed to develop sufficient resistance to lateral sliding along the top of the reinforcement layers beneath the embankment side slope to withstand the active thrust below the embankment crest (see Figure F.5).

(4) <PER> The value of L_e should be calculated from Formula (F.3):

$$L_e = \frac{T_{ds}}{\gamma h a' \tan\varphi} \quad \text{(F.3)}$$

where:

γ is the weight density of the embankment fill;
H is the height of the embankment;
h is the average height of the embankment fill above the reinforcement length L_e;
a' is an interaction coefficient between the embankment fill and the reinforcement;
φ is the angle on internal shearing resistance angle of the fill.

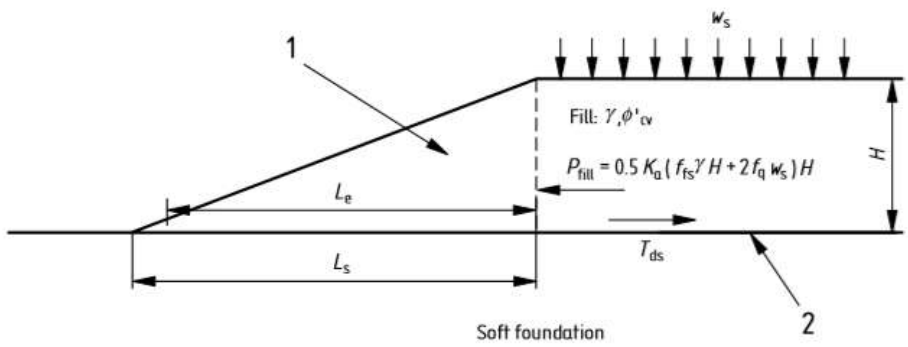

Key
1 Embankment
2 Reinforcement

Figure F.5 – Calculation model to determine resistance to sliding

b. Resistance to foundation extrusion

(1) <RCM> Where the thickness of low strength fine foundation soil is relatively small compared to the embankment width (thickness ≤ 0.25 embankment width) foundation extrusion, squeezing, should be assessed.

(2) <RCM> The side slope of the embankment should be wide enough to develop resistance to prevent the mobilisation of the outward shear stresses in the foundation soils (see Figure F.6).

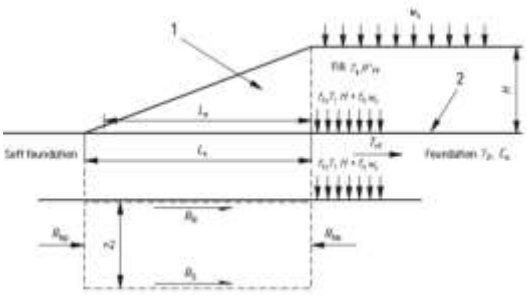

Figure F.6 – Calculation model to determine resistance to extrusion

(3) <RCM> The minimum side slope length required should be determined using Formula (F.4):

$$L_e = \frac{(\gamma H + W_s - 4c_u)z_c}{(1 + a'bc)c_u} \quad \text{(F.4)}$$

where:

γ is the unit weight of the embankment fill;

H is the maximum height of the embankment;

W_s is the surcharge load;

c_u is the undrained shear strength of the soft foundation soil;

z_c is the depth of the foundation soil when the depth is limited and c_u is constant throughout;

a′bc is the soil/reinforcement interaction coefficient relating to c_u.

F.5 Calculation models for load transfer platform over rigid inclusions

a. General

(1) <RCM> Reinforcement should be designed to transfer the load from the embankment onto the rigid inclusions (see Figure F.7).

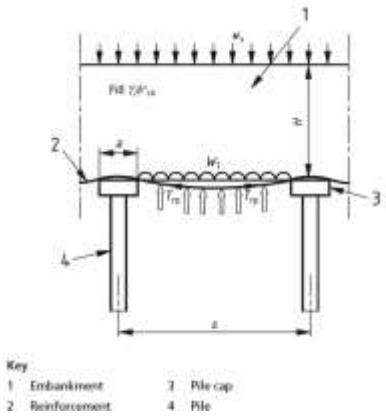

Figure F.7 – Schematic concept of a load transfer platform

b. Hewlet and Randolph method

(1) <REQ> In the Hewlet and Randolph method, the surcharge on the load transfer platform shall be assumed to be constant.

(2) <RCM> For geosynthetic reinforcement that will allow some deformation the tensile load T_{rp} should be calculated from Formula (F.5):

$$T_{rp} = \frac{W_t(s_p - B)\sqrt{1 + 1/6\varepsilon}}{2B} \tag{F.5}$$

where:

W_t is the vertical distributed load on the reinforcement;

s_p is the centre to centre spacing of the piles;

B is the breadth of the pile cap;

ε is the strain in the reinforcement;

NOTE 1. This formula has two variables that need to be balanced according to the load/strain characteristics of the reinforcement.

(3) <REQ> The strain in reinforcement shall be lower than allowable strain for an analysed limit state.

NOTE 1. Detailed information about the Hewlet and Randolph method can be found in BS8006-1.

c. EBGEO method

(1) <REQ> In the EBGEO method, the surcharge on the load transfer platform shall be assumed to be triangular.

NOTE 1. The detailed calculation procedure can be found in EBGEO.

d. Concentric arches method

(1) <REQ> In the concentric arches method, the surcharge on the load transfer platform shall be assumed to have a shape of inverse triangle.

NOTE 1. The detailed calculation procedure can be found in the Dutch Design Guideline CUR226.

F.6 Calculation models for embankments over voids

(1) <PER> In areas prone to the development of voids or deep depressions soil reinforcement may be used to provide a short term indicating function or a long term permanent solution.

(2) <RCM> The design void diameter is an assumption and should be based on previous experience of the site conditions.

(3) <RCM> The allowable differential settlement (d_s/D_s) of the ground surface above the void should be as specified by the relevant authority or for a specific project with the relevant parties.

NOTE 1. UK Highways specify 1% for motorways and trunk roads and 2% for other roads

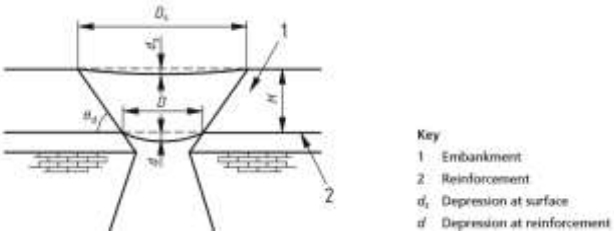

Figure F.8 – Parameters required for Formula (F.6)

(4) <RCM> Provided the deformed shape of the geosynthetic reinforcement is parabolic, the strain in the reinforcement layer ε_{max} should be determined from Formula (F.6):

$$\varepsilon_{\max} = \frac{8(d_s/D_s)2(2 + 2H/\tan\theta_d)}{3D^6} \qquad \text{(F.6)}$$

where:

d_s is the deformation at the surface;

D_s is the diameter of the depression at the surface;

D is the diameter of the void at the level of the geosynthetic layer;

H is the height of the embankment fill above the geosythetic layer;

θ_d is the angle of draw of the embankment fill.

(5) <PER> The tensile force T_{rs} in the geosynthetic reinforcement may be calculated using Formula (F.7) ensuring that the reinforcement strain ε that is compatible with the reinforcement tensile load is less than the maximum strain ε_{max}:

$$T_{rs} = 0.5\lambda(\gamma H + w_s)D\sqrt{1 + 1/6\varepsilon} \quad \text{(F.7)}$$

where:

λ is a coefficient depending on whether the reinforcement is spanning one way ($\lambda = 1$) or two ways ($\lambda = 0.67$);

H is the height of material above the geosynthetic layer;

w_s is the surcharge;

D is the diameter of the void at the level of the geosynthetic layer;

γ is the weight density of the embankment fill;

ε is the reinforcement strain.

F.7 Veneer reinforcement

<Drafting NOTE>Equations still to be added to this clause>

(1) <RCM> The stability of a soil veneer above a potential sliding plane should be calculated by assuming a tension crack at the top of the slope and a resistant passive wedge at the toe. Fig F12

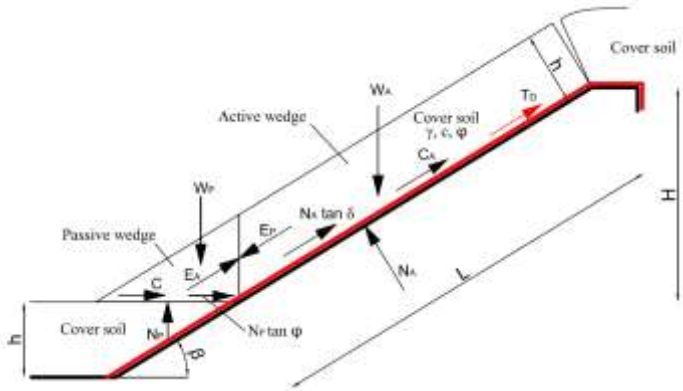

Figure F.9 – <caption to be added>

(2) <RCM>The contribution of friction down the slope should take the value of the lowest frictional interaction between the multiple layers that form the cover seal to a landfill.

NOTE 1. Cover systems to landfills can be made up of multiple synthetic and mineral layers with different frictional characteristics.

(3) <REQ> The stability calculations shall include the temporary condition of the construction plant travelling on the veneer layer.

(4) <RCM> The stability of the anchorage at the top of the veneer, and any intermediate anchorages down the slope, should be verified.

Annex G

(informative)

Ground improvement

G.1 Use of this Informative Annex

(1) This Informative Annex provides additional guidance to that given in Clause 10 for ground improvement.

NOTE 1. National choice on the application of this Informative Annex is given in the National Annex. If the National Annex contains no information on the application of this informative annex, it can be used.

G.2 Scope and field of application

(1) This Annex:

- gives examples of diffused ground improvement techniques in Table G.1;
- gives examples of discrete ground improvement techniques in Table G.2;
- indicates which European execution standards (if any) apply to each technique.
- provides an example of progressive design of ground improvement;

G.3 Examples of ground improvement techniques

NOTE 1. The Classes/Families defined in Table 10.1 do not necessarily determine the calculation model or interaction between the improved ground and the surrounding soil.

NOTE 2. For uncommon and rarely used ground improvement techniques, specialist design knowledge is needed throughout the design process.

Table G.1 – Examples of diffused ground improvement techniques

Method	Technique	Class	Description	Execution Standard
Grouting Methods	Permeation grouting	II	Replacement of interstitial water or gas of a porous medium with a grout, also known as "impregnation" grouting. Suitable for a wide range of soils to considerable depths.	EN 12715
	Jet grouting	II	Hydraulic disaggregation of soils using high velocity jets of fluid binder combined or not with either water or water and air. Suitable for most soils and available for land or marine use to considerable depths.	EN 12716
	Compaction grouting	I	Displacement grouting method which is the injection of a medium/low slump mortar into the soil to compact/densify it by expansion alone. Suitable for a wide range of soils to considerable depths.	EN 12715

Method	Technique	Class	Description	Execution Standard
Compactive Methods	Deep vibration	I	Densification of generally granular soil by the insertion of a vibrating poker. Significant depths of suitable soils can be treated and marine operation is possible.	EN 14713
	Dynamic compaction	I	Densification of soil by the impact of heavy weights from significant heights. Significant depths of suitable soils can be treated and marine operation is possible.	None
	Impact roller compaction	I	Compactive effort provided by a non-circular roller, usually three or four sided. Only shallow depths of suitable soils can be treated.	None
	Rapid impact compaction	I	Compactive effort provided by weight dropping with a rapid control mechanism usually mounted on a vertical arm. Shallow/medium depths of suitable soils can be treated.	None
	Micro-blasting	I	Compactive effort provided by detonating small charges of explosive at depths below ground level. The weight and arrangement of explosive charge is tailored to the depth and type of soil present. It can be used over water and can treat considerable depths.	None
Soil Replacement	Soil replacement	II	Replacement of unsuitable soil with engineered materials with or without georeinforcement. Depth limited by excavation stability.	None
Thermal Methods	Ground freezing	II&III	Freezing of interstitial water within soils to create hardened bodies of significant strength and very low hydraulic conductivity. More suitable for granular soils but can be used in cohesive soils with care due to potential soil expansion.	None
	Ground heating	II	The use of thermal methods to generally remove water from fine grained soils with a resultant increase in strength. Ultimately with very high temperatures, soil can be fused in a rock like structure.	None
Consolidation Methods	Surcharge	I	Use of additional load in advance of construction, generally on soft clays, to force consolidation and reduce long term residual settlements	None
	Vertical drains & surcharge	I	Use of sand or prefabricated geotextile drains in combination with surcharge to reduce drainage paths within soft cohesive soils to force accelerated consolidation and accelerated groundwater pressure dissipation during construction in order to reduce overall programme and to reduce residual long-term settlements. Land and marine based rigs available to considerable depths.	EN 15237
	Dewatering	I	Lowering of the ground water table or depressurisation of the groundwater pressure within soils to increase effective strength, force consolidation and reduce long term residual settlements.	None
	Vacuum consolidation	I	Use of a vacuum instead of surcharge in advance of construction, generally on soft cohesive soils, to force accelerated consolidation and accelerated groundwater pressure dissipation during	EN 15237

Method	Technique	Class	Description	Execution Standard
			construction in order to reduce overall programme and to reduce residual long-term settlements.	

Table G.2 – Examples of discrete ground improvement techniques

Method	Technique	Class	Description	Execution Standard
Mixing Methods	Dry methods	II&III	Mechanical disaggregation of soils while introducing a dry binder pneumatically and commonly cement. Most usually executed in soft to very soft clays and silts. Land and marine based rigs available to considerable depths.	EN 14679
	Wet methods	II&III	Mechanical disaggregation of soils while introducing a fluid binder. Generally more powerful system than the dry system and can be executed in various type of soils. Land and marine based rigs available to considerable depths.	EN 14679
	Jet grouting	II&III	Hydraulic disaggregation of soils using high velocity jets of fluid binder combined or not with either water or water and air. Suitable for most soils and available for land or marine use to considerable depths.	EN 12716
Granular Columns	Stone columns/ Vibro-replacement	II	Compacted stone columns are created in the ground to form a composite ground with the surrounding soil. For cohesive soil, this increases the shear strength, and at the same time, it stabilises early settlement to reduce the consolidation settlement rate. For granular soils, it increases the relative density, thus enhances the shear strength. Land and marine based rigs available to considerable depths.	EN 14713
	Sand columns/ Sand compaction piles	II	Compacted sand columns are created in the ground to form a composite ground with the surrounding soil. For cohesive soil, this increases the shear strength, and at the same time, it stabilises early settlement to reduce the consolidation settlement rate. For granular soils, it increases the relative density, thus enhances the shear strength. Land and marine based rigs available to considerable depths.	EN 14713
	Dynamic replacement	II	The use of dynamic compaction to drive bulbs of granular material into soft soils thereby both improving the soil by the dynamic compaction and the introduction of competent granular piers. Most often used in soft cohesive soils to improve strength and accelerate drainage. Land and marine based rigs available.	None
	Geosynthetics encased columns	II	Stone or sand columns, encased in a geotextile casing, formed in very soft soils where the lateral restraint is too small to prevent very significant column bulging. The geotextile casing provides support to the columns and prevents excessive bulging under load. Land and marine based rigs available to significant depths.	None

Method	Technique	Class	Description	Execution Standard
Steel/Wood Columns	Vibrated	II	Rigid columns of steel or wood are vibrated into the ground, causing some densification, to form a composite ground with various type of soil and providing support to the structure above through load distribution between the soil and inclusions. Land and marine based rigs available to considerable depths.	None
	Bored	II	Rigid columns of steel or wood are bored into the ground, sometimes with associated compactive effort, to form a composite ground with various type of soil and providing support to the structure above through load distribution between the soil and inclusions. Land and marine based rigs available to considerable depths.	None
	Driven	II	Rigid columns of steel or wood are driven into the ground, causing some densification, to form a composite ground with various type of soil and providing support to the structure above through load distribution between the soil and inclusions. Land and marine based rigs available to considerable depths.	None
Concrete/ Mortar Columns	Vibrated concrete columns	II	An improvement method whereby columns of concrete or mortar are backfilled in the ground during withdrawal of a vibrating pipe or poker to form a composite ground with various type of soil, providing support to the structure above through load distribution between the soil and inclusions and densification effort to the existing ground.	None
	Bored	II&III	An improvement method whereby columns of concrete or mortar are backfilled in the ground during withdrawal of a boring auger to form a composite ground with various type of soil, providing support to the structure above through load distribution between the soil and inclusions sometimes with associated compactive effort to the existing ground.	None
	Driven	II	An improvement method whereby columns of concrete or mortar are backfilled in the ground during withdrawal of a driven pipe to form a composite ground with various type of soil, providing support to the structure above through load distribution between the soil and inclusions and densification effort to the existing ground.	None
	Grouted stone columns	II	An improvement method whereby compacted and grouted stone columns are created in ground to form a composite ground with the surrounding soil. For cohesive soil, this increases the shear strength, and at the same time, it stabilises early settlement to reduce the consolidation settlement rate. For granular soils, it increases the relative density, thus enhances the shear strength. Land and marine based rigs available to considerable depths.	None

G.4 Example of progressive design of ground improvement

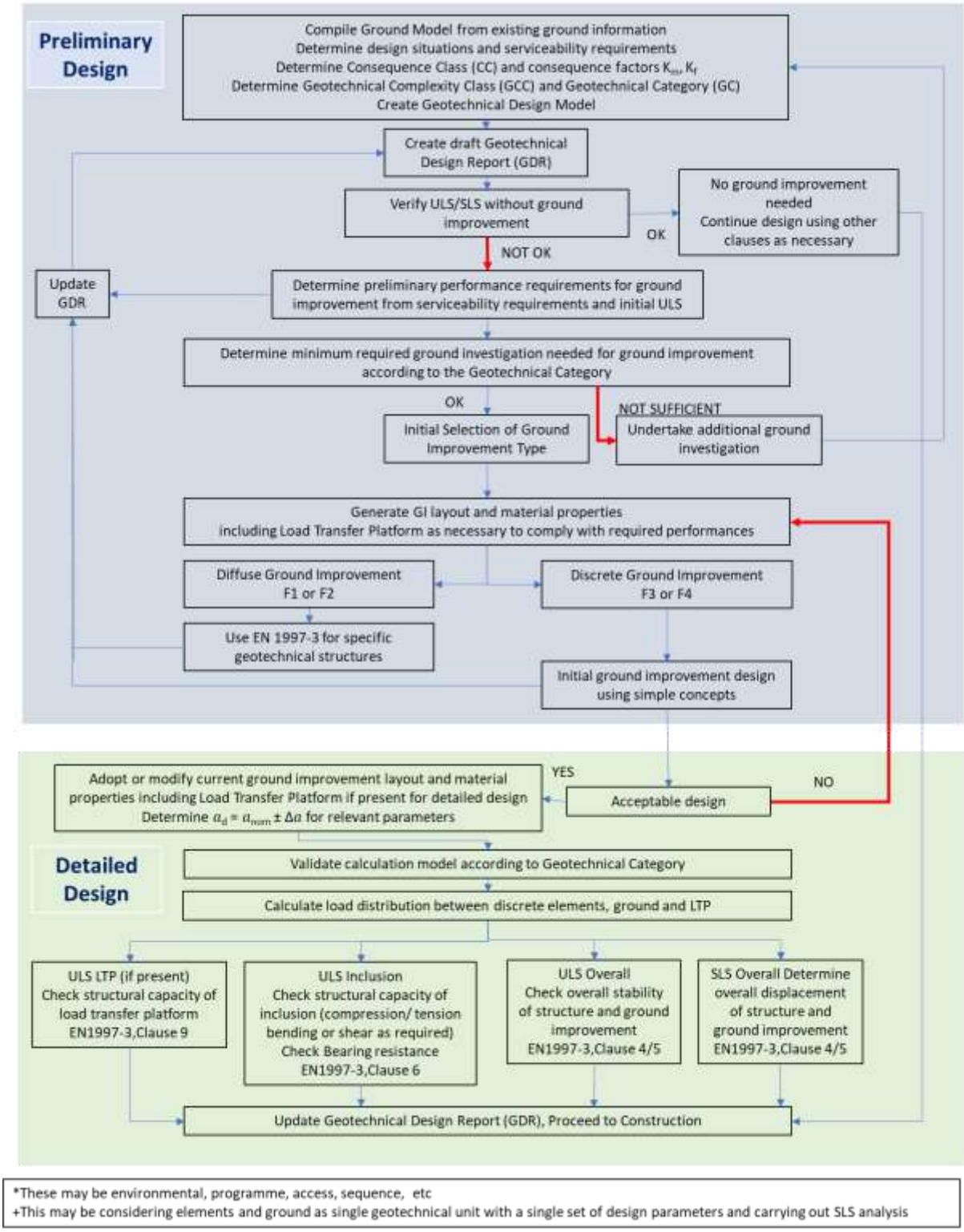

Figure G.1 – Flow chart showing preliminary and detailed design of ground improvement

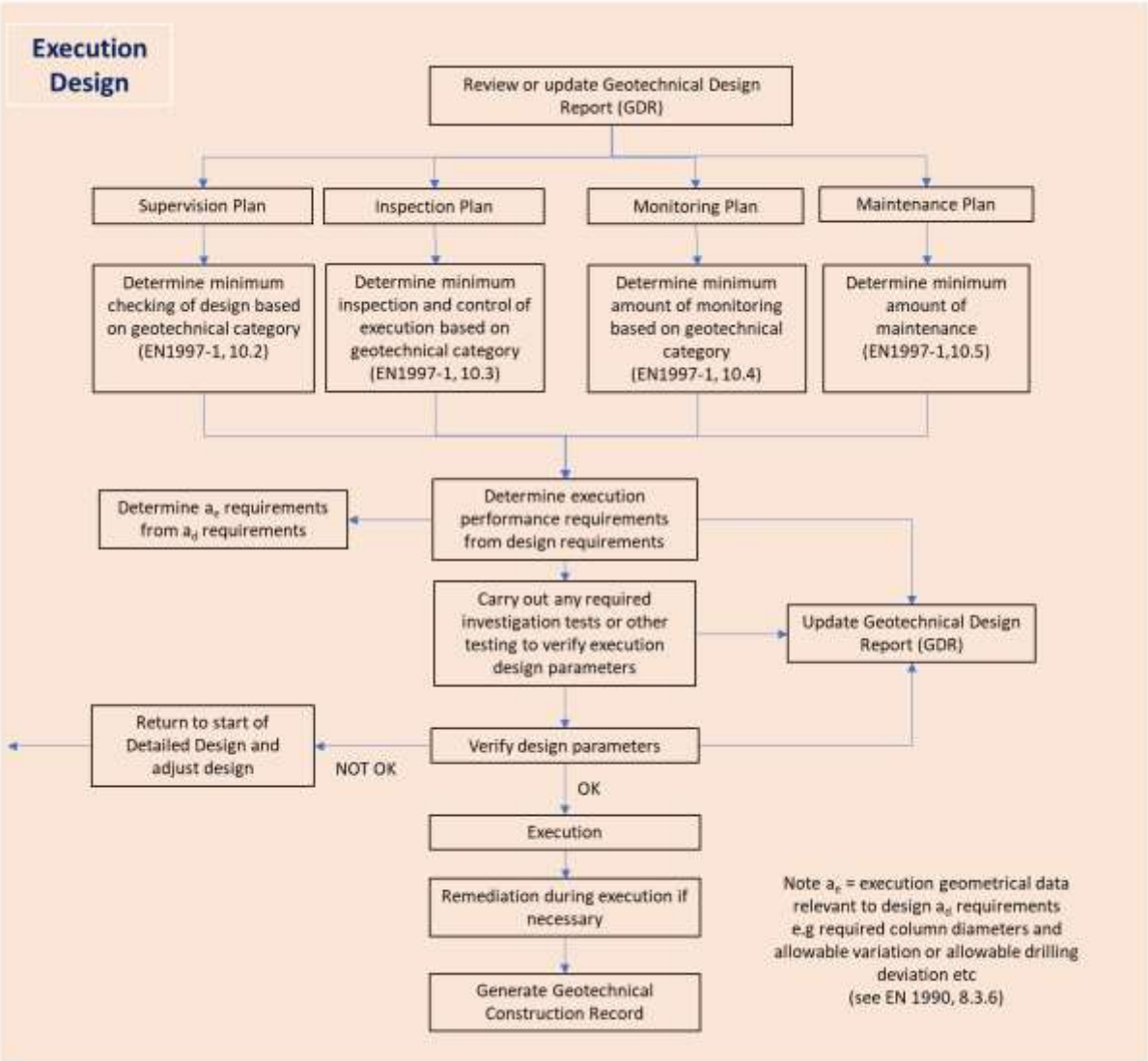

Figure G.2 – Flow chart showing execution design of ground improvement

Bibliography

EN ISO 22476-7 Geotechnical investigation and testing — Field testing — Part 7: Borehole jack test

Clarke B.G, Gambin M.P. Pressuremeter testing in onshore ground investigations. A report by ISSMGE Committee TC 16., Atlanta: Proc. 1st Int. Conf. on Site Characterization, 1998, Vol. 2, 1429–1468

Clarke, B.G., Pressuremeters in Geotechnical design. Glasgow: Blackie Academic and Professional, 1995, 364 pages

Ministère de l'Equipement du Logement et des Transports (1993), Règles techniques de conception et de calcul des fountdations des ouvrages de Génie civil, CCTG, Fascicule no. 62, Titre V..

Clause 6

American Wood Preservers Institute (2002), Timber Pile Manual.

BRE (2003), Timber Piles and Foundations, DG479-217144.

Clause 9

Clouterre (xxxx)

BS 8006-2:2011

CIRIA C637 (xxxx)

Annex A

References to listed methods:

1: Bishop, A. W., The use of the slip circle in the analysis of slopes. Geotechnique, Vol 5, (1965) Proc. Europ. conf. on stability of earth slopes., Stockholm, Volume I, page 1-14, (1954);

2: Fredlund D.G., Krahn J., Comparison of slope stability methods of analysis., Canadian Geotechnical J. Vol29, no 3 (1977).

3: Janbu, N., Application of composite slip surfaces for stability analysis. Proc. Europ. conf. on stability of earth Slopes., 1954 Stockholm, Vol 3, Page 43-49 (1955);

4: Morgenstern, N. R., Price, V. W., The analysis for the stability of general slip surfaces. Geotechnique, Vol 15, (S. 79-93 (1965);

5: Spencer, E., A method of analysis of the stability of embankments assuming parallel inter-slice forces., Geotechnique, Vol.17, S. 11-26 (1967);

6: Sarma S.K., Stability analysis of embankments and slopes., Journal of the geotechnical engineering division. ASCE, Vol.105, no GT12 (1979);

DIN 4084:2009-01, Baugrund – Geländebruchberechnungen. Berlin: Beuth Verlag;

8: ditto;

9: no ref. given; can be found in many geotechnical textbooks;

10: original method by Coulomb, C.A. (1776) and adapted by Cullman (1866). No ref. given; can be found in many geotechnical textbooks;

11: Froelich, O.H., The factor of safety with respect to sliding of soil along the arc of a logarithmic spiral. Proc. of the 3rd ICSMFE Conference, Vol 2, Switzerland (1953).

Annex B

Ministère de l'Equipement du Logement et des Transport (1993).

EN ISO 22476-7

Clarke and Gambin (1998)

Clarke (1995)

Annex D

Kérisel and Absi (1990)